PARTS MANUAL

00. MAINTENANCE
FILTERS KIT

FIGURE	REFERENCE	DENOMINATION	AMOUNT
001	KF.48000RE00	FILTER KIT M 200 H	1
001.1	MN000048	GASOIL FILTERING	1
001.2	MN000042	OIL FILTER + JOINT	1
001.3	46.02312.00	SECURITY FILTER ELEMENT	1
001.4	46.02311.00	MAIN FILTER ELEMENT	1
001.5	48.10611.00	OIL FILTER CARTRIDGE	1
001.6	58.01810.00	HIDRAULIC CATRIDGE INTANK	1

02. ENGINE
MOTOR

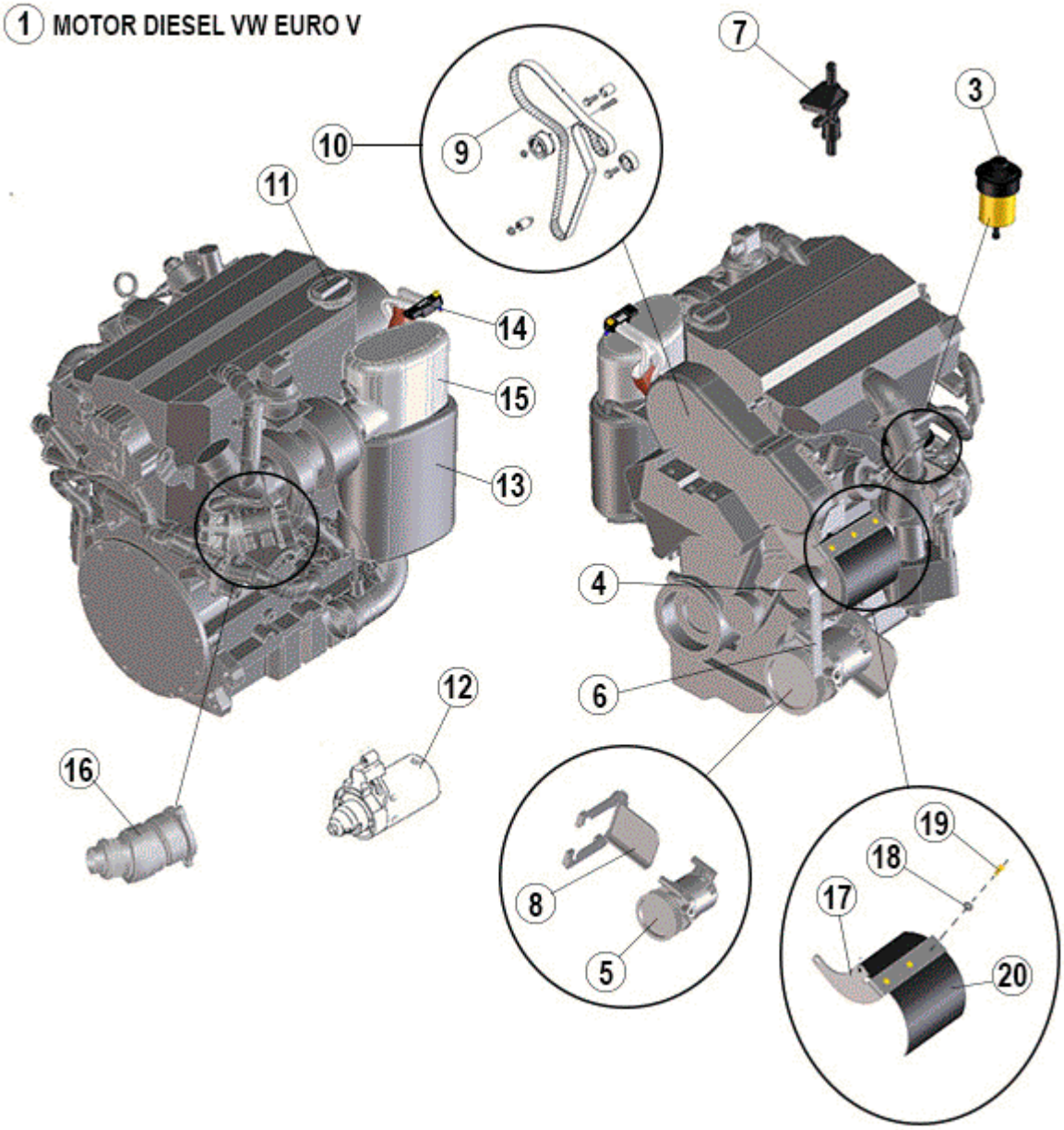

FIGURE	REFERENCE	DENOMINATION	AMOUNT
001	46.21000.05	DIESEL ENGINE VW EUROV	1
003	MN000042	OIL FILTER + JOINT	1
004	VW06F903023F		1
005	46.02701.00	ACTUATOR	1
006B	46.02702.03	Belt by A/C 1076mm	1
006B	46.02702.04	STRAP WITHOUT A / C	1
007	VW03L919824C	FUEL TEMPERATURE SENSOR	1
008	46.02709.04	COMPRESSOR SUPORT	1
009	vw03l109119d	CORREA DISTRIBUTION	1
010	VW03L198119	TIMING BELT KIT	1

011	VW06C103485P	PLUG OIL	1
012	VW076911023A	STARTER	1
013	vw2x0254700A	PARTICULATE FILTER	1
014	VW076906051B	PRESSURE TRANSDUCER	1
015	VWAGSN0131783	PROTECTOR FILTER	1
016	VW03L131111E	TUBE	1
017	48.02103.00	PROTECTOR SUPPORT	1
018	112.05000.66	WASHER DIN9021 D5	3
019	502.05016.60	RIVET DIN1476	3
020	48.02104.00	PROTECTOR ALTERNATOR	1

02. ENGINE

MOTOR CIRCUIT EURO V

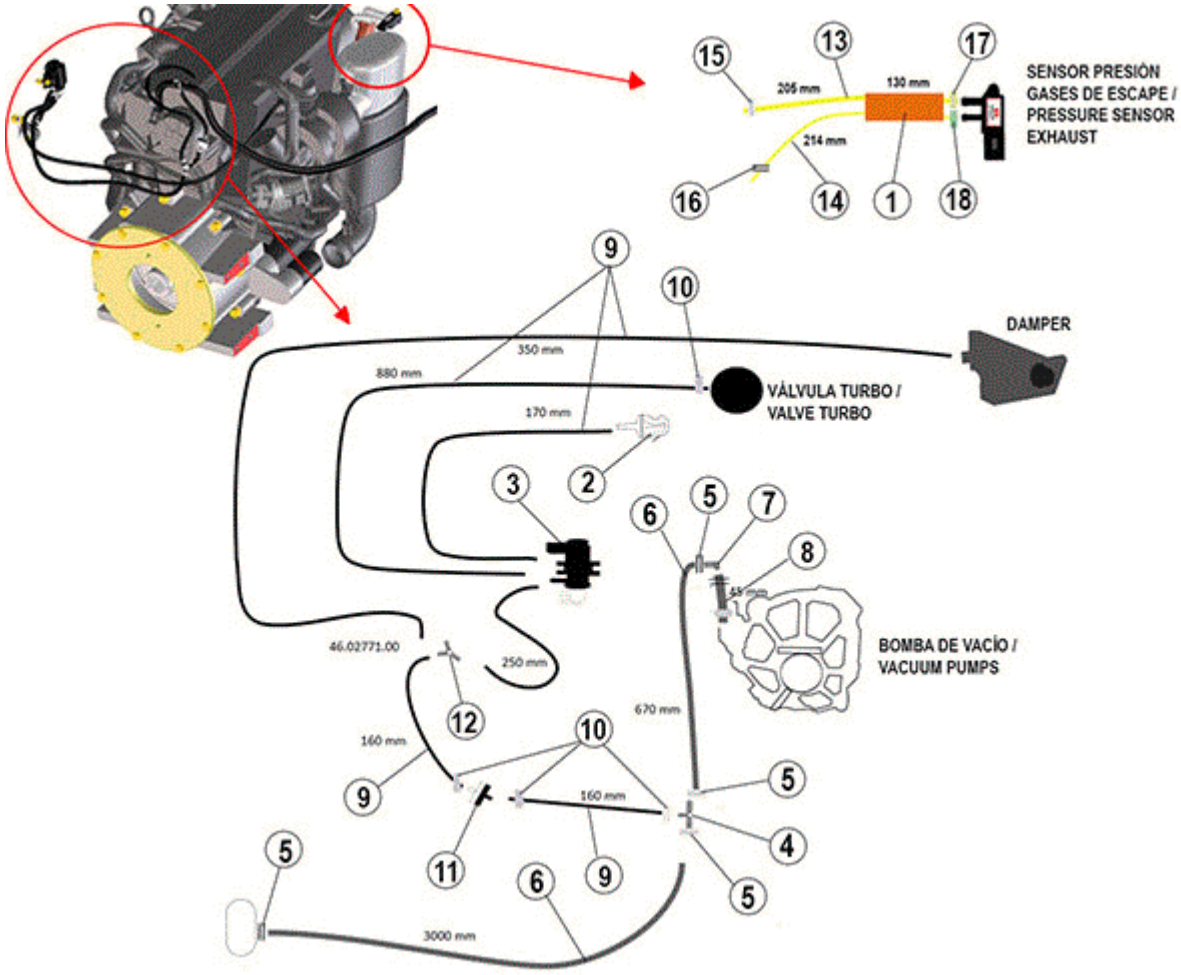

FIGURE	REFERENCE	DENOMINATION	AMOUNT
001	464.05765.00	FIREPROOF PROTECTION TUBE D57	1
002	VW702129965	AIR FILTER	1
003	vw1k0906627a	PRESSURE SENSOR	1
004	46.02197.00	FITTING	1
005	948.01508.00	FLANGE D15	5
006	491.00008.00	HOSE D8	2
007	46.05060.00	FITTING	1
008	491.00010.00	HOSE INTERNAL D10	1
009	469.25009.00	HOSE L/P MAT.	4
010	948.00907.00	CLAMP SPRING D9	6
011	vw046905291a	NON RETURN VALVE	1
012	46.02771.00	FITTING	1
013	485.08014.00	SILICON HOSE D8XD14	1
014	485.06012.00	SILICON HOSE D6XD12	1
015	948.01308.00	SPRING CLAMP Ø13	1
016	948.01208.00	FLANGE	1

017	948.01308.00	SPRING CLAMP Ø13	1
018	948.01107.00	CLAMP SPRING	1

02. ENGINE
ENGINE COUPLING

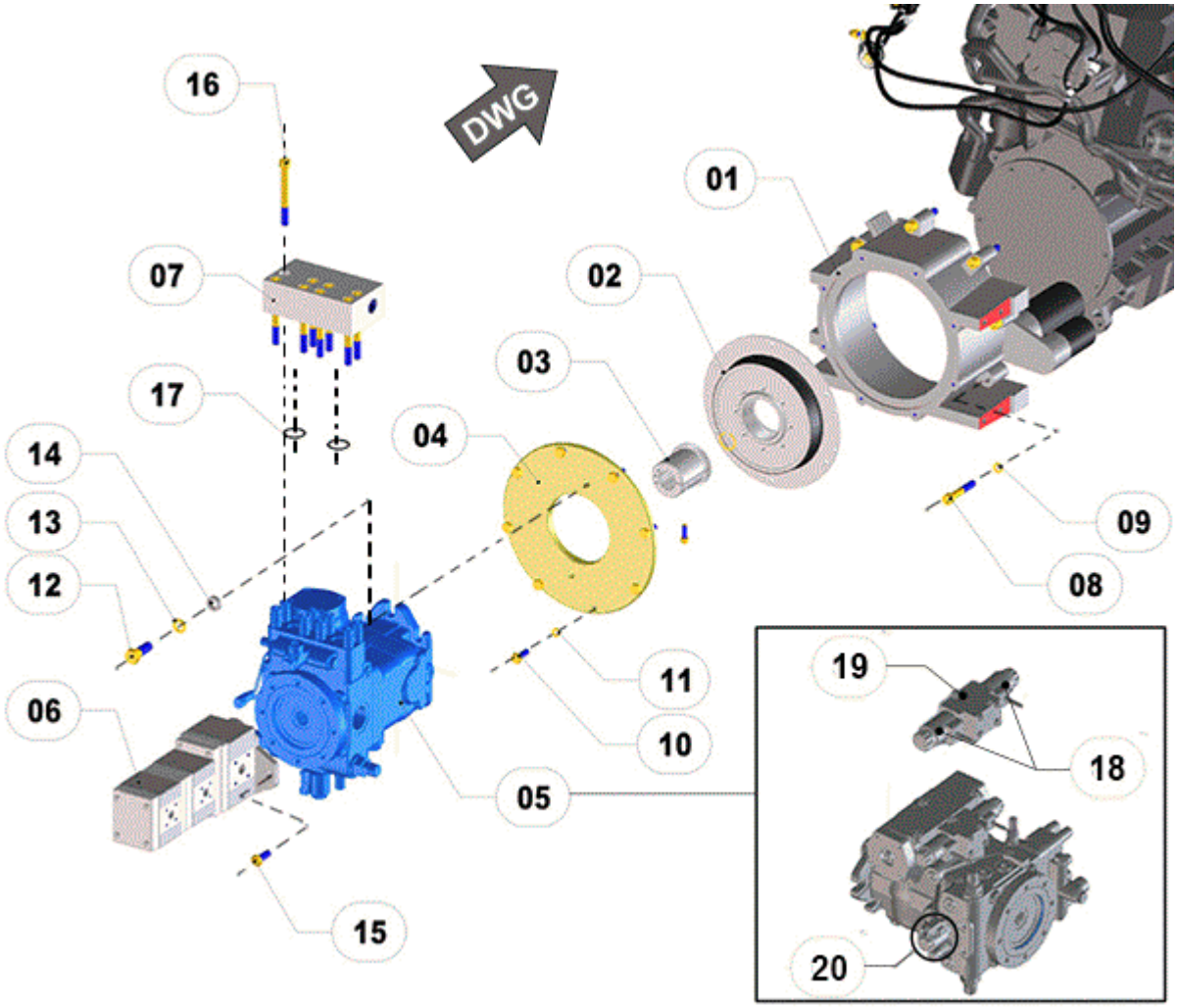

FIGURE	REFERENCE	DENOMINATION	AMOUNT
001	46.02100.41	DIESEL ENGINE FLYWHEEL HOUSING	1
002	48.03208.01	KTR COUPLING	1
003	48.03209.01	GEAR. DIN5480 35X2X16X8H	1
004	48.03207.01	COUPLING PLATE	1
005	48.03300.00	OIL PUMP HIDROMATIC REXROT	1
006	48.10100.00	Hydro Pump. TRIPLE	1
007	48.03301.00	HIGH PRESSURE CONNECTOR	1
008	601.12070.87	SCREW DIN 912 M12x70	9
009	104.12000.00	WASHER DIN7980 D12	9
010	603.10030.87	SCREW DIN 933 M10x30	8
011	104.10000.00	WASHER DIN7980 D10	8
012	603.16045.87	SCREW DIN933 M16X45	2
013	104.16000.00	CIR-CLIP EXT. DIN7980	2
014	101.16000.67	WASHER DIN125 D16	2
015	603.12035.87	SCREW M12x35	2
016	601.12110.86	SCREW DIN912 M12X110	8

017	48.03302.00	O-RING	2
018	RXR902603442	PROPORTIONAL SOLENOID	2
019	RXR902106746	PILOT COMMAND BLOCK	1
020	RXR902113712	VALVULA DE COSECUENCIA	1

02. ENGINE

ENGINE COUPLING

CHÂSSIS: 68961

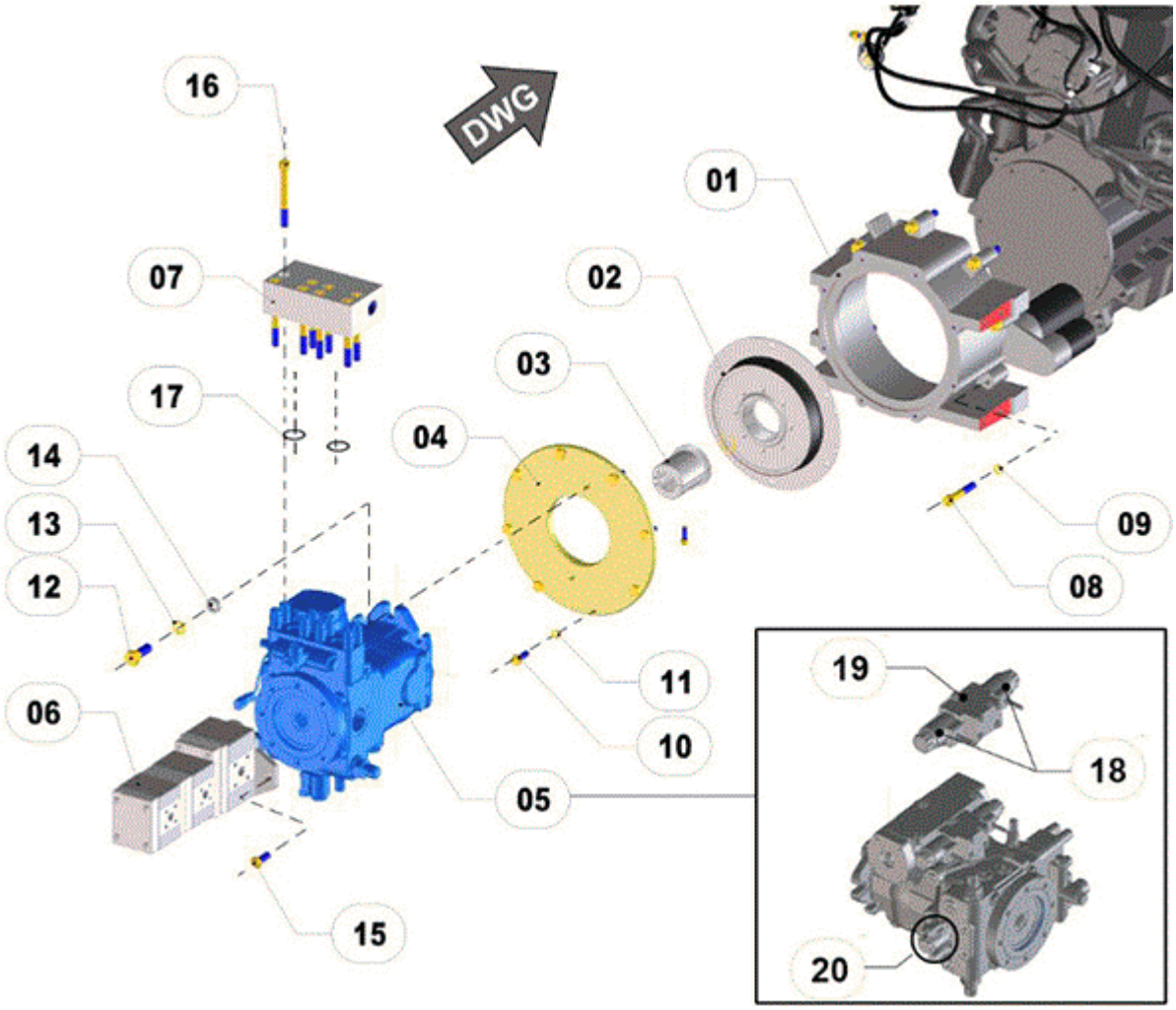

FIGURE	RÉFÉRENCE	NOM	QUANTITÉ
001	46.02100.41	DIESEL ENGINE FLYWHEEL HOUSING	1
002	48.03208.01	KTR COUPLING	1
003	48.03209.01	GEAR. DIN5480 35X2X16X8H	1
004	48.03207.01	COUPLING PLATE	1
005	48.03300.01	OIL HIDROMATIC PUMP FOR 4	1
006	48.10100.00	Hydro Pump. TRIPLE	1
007	48.03301.00	HIGH PRESSURE CONNECTOR	1
008	601.12070.87	SCREW DIN 912 M12x70	9
009	104.12000.00	WASHER DIN7980 D12	9
010	603.10030.87	SCREW DIN 933 M10x30	8
011	104.10000.00	WASHER DIN7980 D10	8
012	603.16045.87	SCREW DIN933 M16X45	2
013	104.16000.00	CIR-CLIP EXT. DIN7980	2
014	101.16000.67	WASHER DIN125 D16	2
015	603.12035.87	SCREW M12x35	2

016	601.12110.86	SCREW DIN912 M12X110	8
017	48.03302.00	O-RING	2
018	RXR902603442	PROPORTIONAL SOLENOID	2
019	RXR902106746	PILOT COMMAND BLOCK	1
020	RXR902113712	VALVULA DE COSECUENCIA	1

COMMENTAIRES

MOD.5299

02. ENGINE

ENGINE COUPLING

CHÂSSIS: 72014

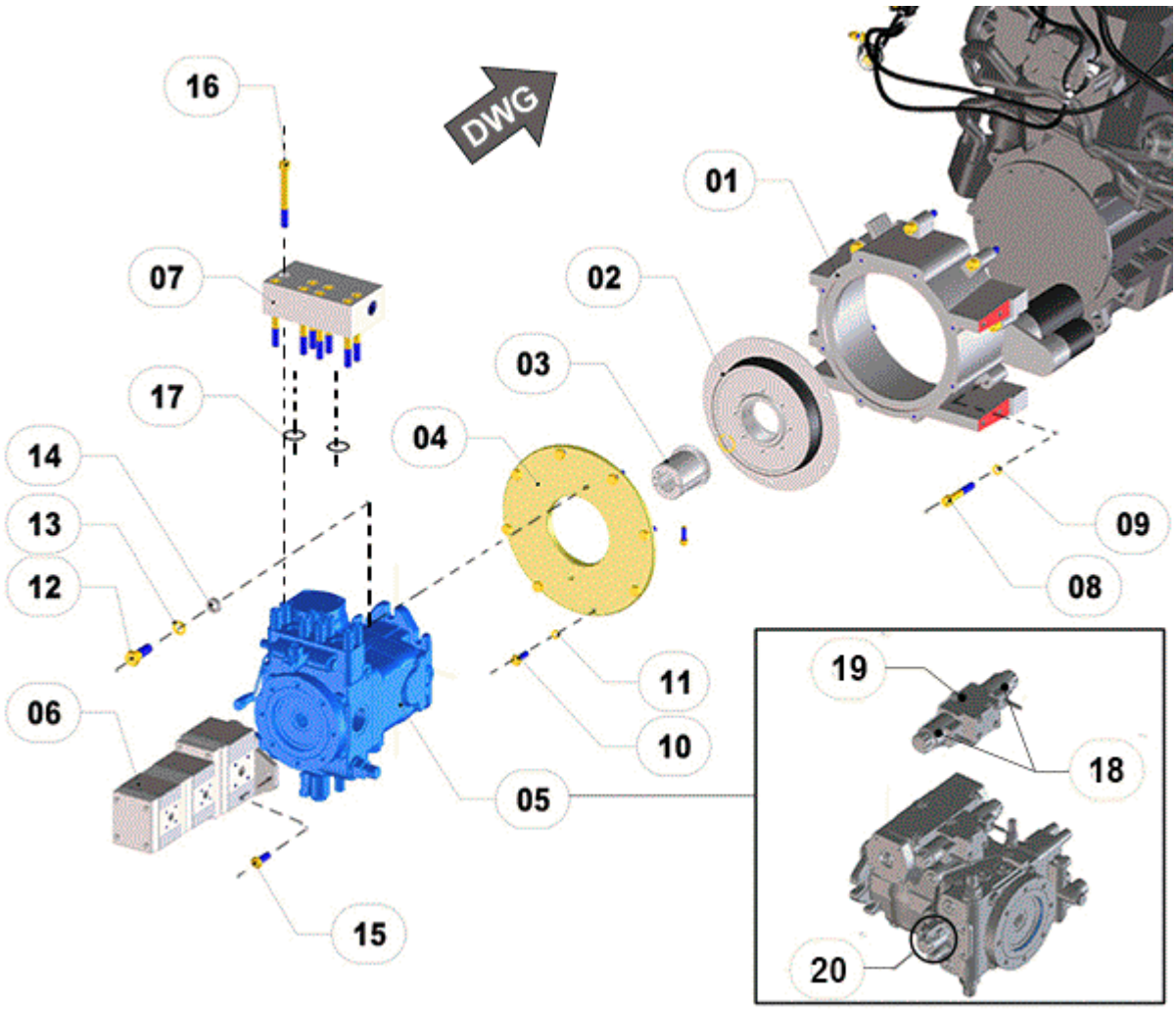

FIGURE	RÉFÉRENCE	NOM	QUANTITÉ
001	46.02100.41	DIESEL ENGINE FLYWHEEL HOUSING	1
002	48.03208.01	KTR COUPLING	1
003	48.03209.01	GEAR. DIN5480 35X2X16X8H	1
004	48.03207.01	COUPLING PLATE	1
005	48.03300.01	OIL HIDROMATIC PUMP FOR 4	1
006	48.10100.01	OIL PUMP TRIPLE 28CC-16CC-	1
007	48.03301.00	HIGH PRESSURE CONNECTOR	1
008	601.12070.87	SCREW DIN 912 M12x70	9
009	104.12000.00	WASHER DIN7980 D12	9
010	603.10030.87	SCREW DIN 933 M10x30	8
011	104.10000.00	WASHER DIN7980 D10	8
012	603.16045.87	SCREW DIN933 M16X45	2
013	104.16000.00	CIR-CLIP EXT. DIN7980	2
014	101.16000.67	WASHER DIN125 D16	2
015	603.12035.87	SCREW M12x35	2

016	601.12110.86	SCREW DIN912 M12X110	8
017	48.03302.00	O-RING	2
018	RXR902603442	PROPORTIONAL SOLENOID	2
019	RXR902106746	PILOT COMMAND BLOCK	1
020	RXR902113712	VALVULA DE COSECUENCIA	1

COMMENTAIRES

MOD.5453(A)

02. ENGINE

EXHAUST PIPE

CHÂSSIS: 75721

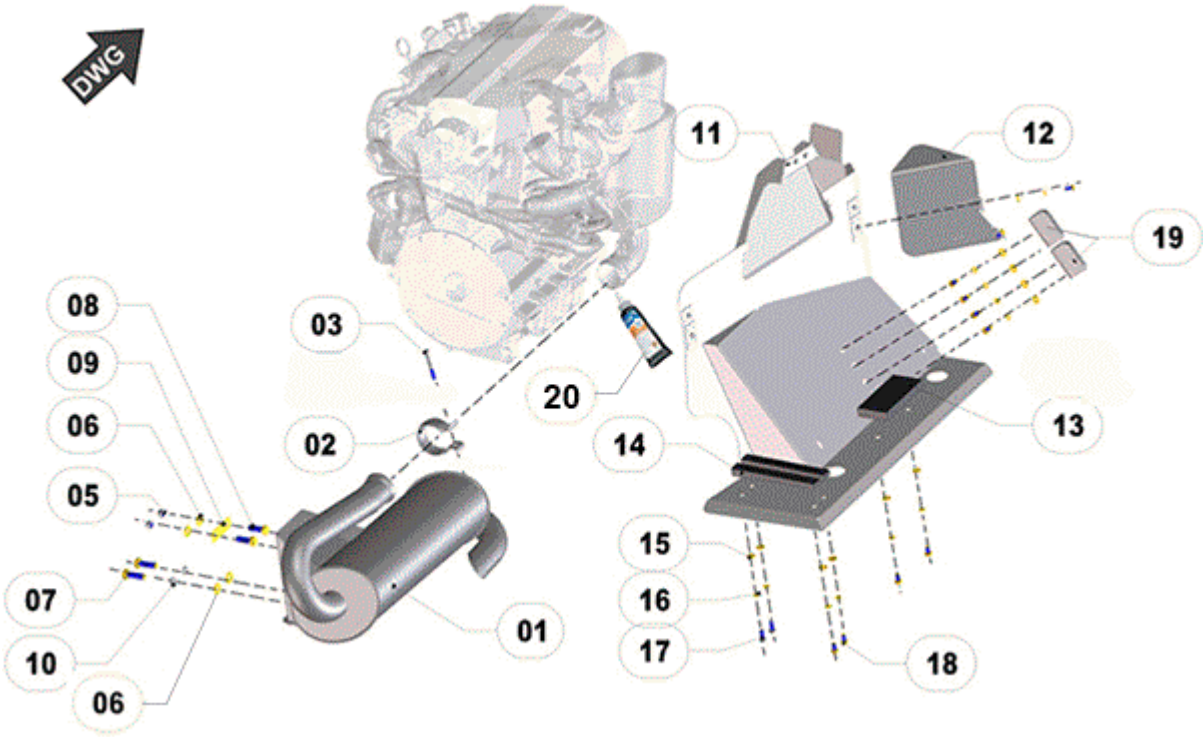

FIGURE	RÉFÉRENCE	NOM	QUANTITÉ
001	48.02202.02	EXHAUST VW EURO5	1
002	46.20205.00		1
003	604.08060.86	SCREW DIN931 M8x60	1
005	701.12000.67	NUT DIN934 M12x1,75	4
006	101.12000.67	WASHER DIN 125 D12	4
007	603.12040.87	SCREW DIN933 M12x40	2
008	603.12035.87	SCREW M12x35	2
009	48.02204.00	SUPPORT	1
010	104.12000.00	WASHER DIN7980 D12	2
011	48.02210.02	PROTECTOR	1
012	48.02212.01	PROTECTOR	1
013	48.02250.00	SEPARATOR PROTECTOR NYLON	1
014	48.02251.00	NYLON PROTECTOR	2
015	101.08000.67	WASHER DIN125 D8	10
016	104.08000.00	WASHER DIN7980 D8	10
017	603.08020.86	SCREW DIN933 M8x20	2
018	603.06015.87	SCREW DIN933 M6x15	10
019	48.08124.00	SOP. PAS. FOR. 103X70X10	2
020	461.00035.00	SEAL GASKET	1

COMMENTAIRES

MOD.5672 REVISIÓN DISEÑO ESCAPE URBAN 200 EURO 5

02. ENGINE
RADIATOR (PART 1)

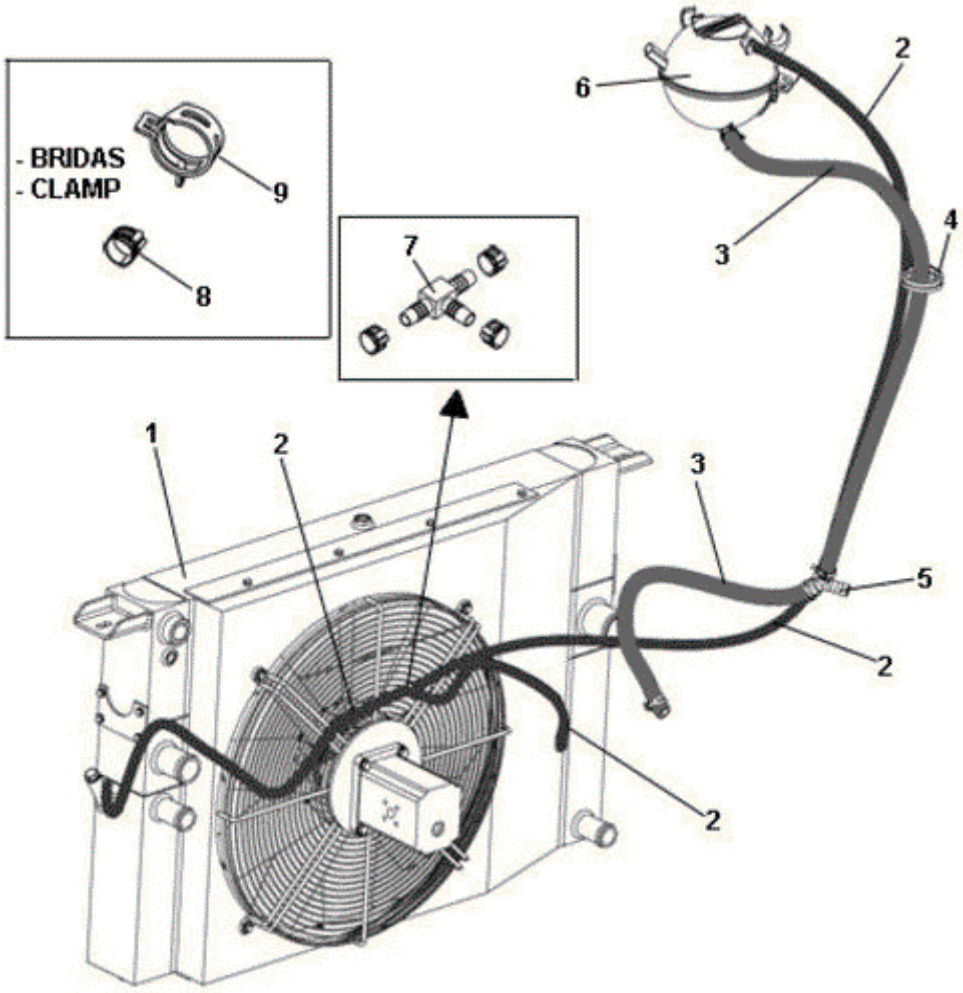

FIGURE	RÉFÉRENCE	NOM	QUANTITÉ
001	48.02500.01	FAN MONTAGE	1
002	469.03014.00	HOSE L/P MAT. 8x14	3
003	464.03022.00	MAT. TUBE B/P 16X22	2
004	830.04006.00	CLAMP LOOP D40x6	1
005	10.00692.00	EMPALME MANGUERA	1
006	48.02501.00	EXPANSION TANK ASSEMBLY	1
007	46.02199.01	FORT CONNECTOR M / M / M D8	1
008	948.01308.00	SPRING CLAMP Ø13	6
009	962.29023.00	CLAMP D16 DIN 3021	4

02. ENGINE

RADIATOR (PART 1)

CHÂSSIS: 70135

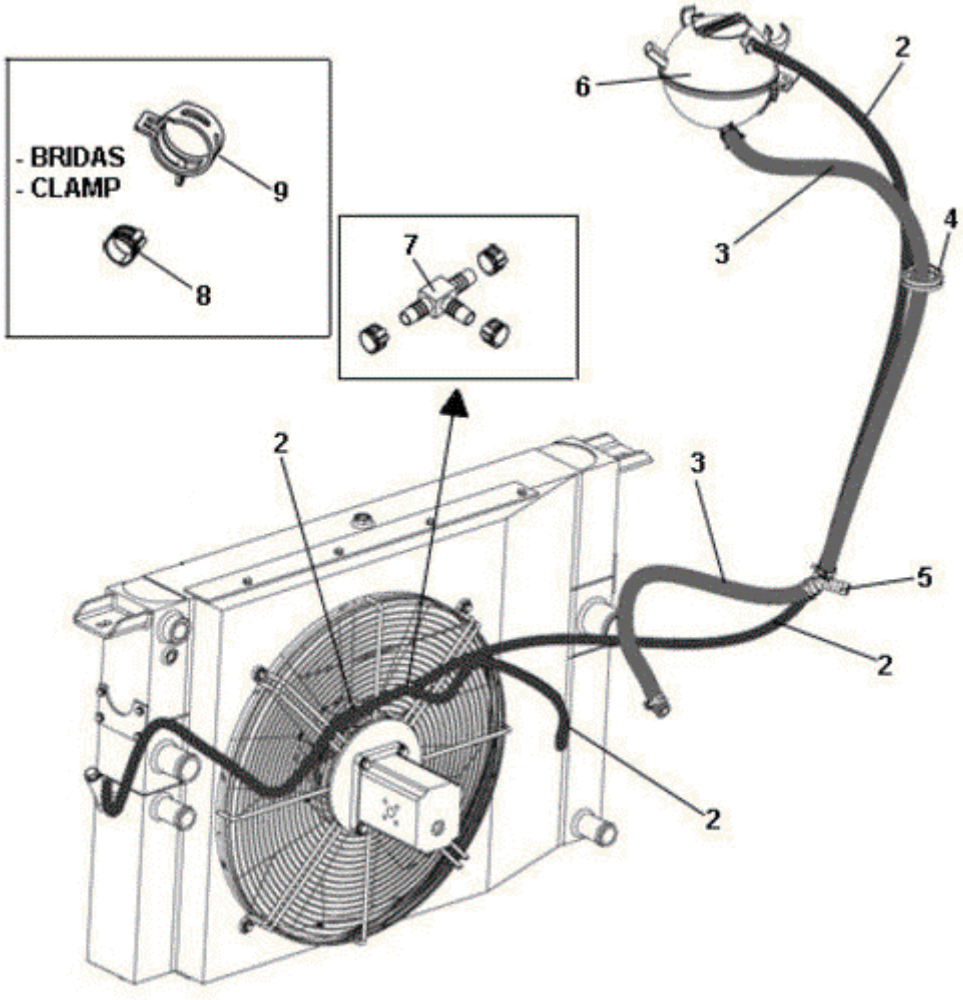

FIGURE	RÉFÉRENCE	NOM	QUANTITÉ
002	469.03014.00	HOSE L/P MAT. 8x14	3
003	464.03022.00	MAT. TUBE B/P 16X22	2
004	830.04006.00	CLAMP LOOP D40x6	1
005	10.00692.00	EMPALME MANGUERA	1
006	48.02501.00	EXPANSION TANK ASSEMBLY	1
007	46.02199.01	FORT CONNECTOR M / M / M D8	1
008	948.01308.00	SPRING CLAMP Ø13	6
009	962.29023.00	CLAMP D16 DIN 3021	4

COMMENTAIRES

MOD.5362(B)

02. ENGINE
RADIATOR (PART 2)

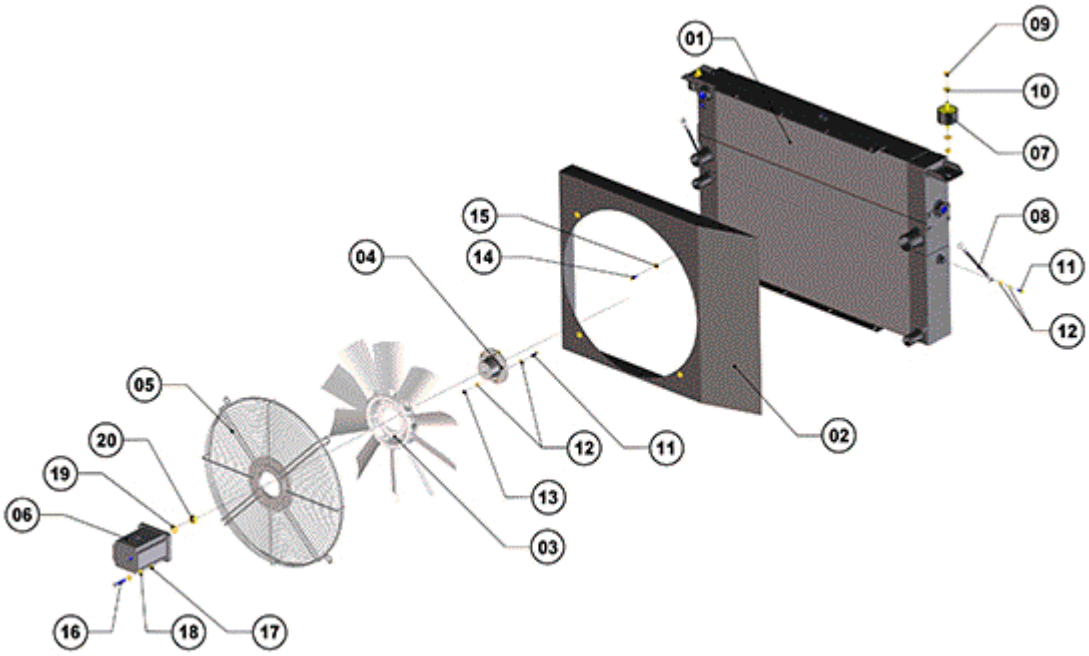

FIGURE	RÉFÉRENCE	NOM	QUANTITÉ
001	48.02503.00	OIL RADIATOR-AIR-WATER	1
002	48.02505.00	RADIATOR SURROUND	1
003	48.02502.01	FAN 500-40º	1
004	48.02506.01	FAN BRAKET D110X50	1
005	48.02504.00	PROT. RADIATOR D557x43	1
006	48.10201.00	MOTOR Hydra. FAN 1 / 5	1
007	64.02134.00	SHOCK ABSORBER, 10x40x15	2
008	48.02512.00	ROD. D8x170	2
009	711.10000.66	NUT DIN982 M10x1.5	4
010	101.10000.67	D10 WASHER DIN125	4
011	603.06025.87	SCREW DIN933 M6x25	7
012	101.06000.67	WASHER DIN125 D6	12
013	720.06000.66	NUT	5
014	603.06020.00	SCREW DIN933	4
015	112.06000.67	CIR-CLIP DIN9021 D6	4
016	603.08040.87	SCREW. M8x40	4
017	720.08000.66	NUT DIN985 M8 AUTOLOCKING	4
018	101.08000.67	WASHER DIN125 D8	8
019	105.14000.66	D14 WASHER DIN7980	1
020	701.14000.66	NUT DIN934 M14x2	1

02. ENGINE

RADIATOR (PART 2)

CHÂSSIS: 70135

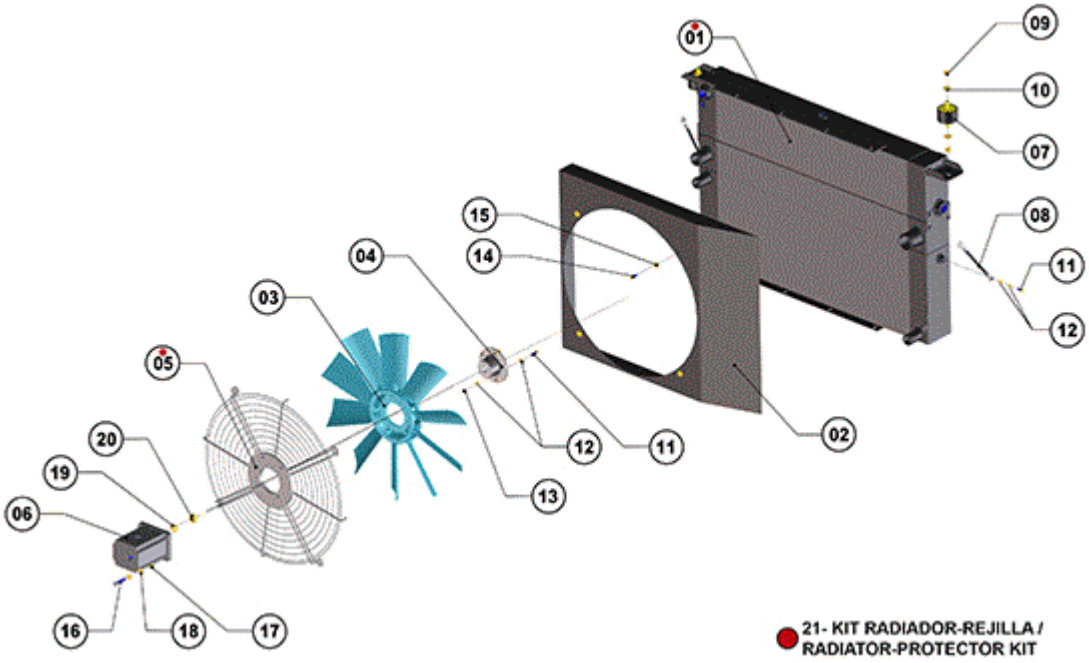

FIGURE	RÉFÉRENCE	NOM	QUANTITÉ
001	48.02503.00	OIL RADIATOR-AIR-WATER	1
002	48.02518.01	RADIATOR PROTECTOR	1
003	48.02517.01	FAN	1
004	48.02506.01	FAN BRAKET D110X50	1
005	48.02504.02	FAN PROTECTOR	1
006	48.10201.00	MOTOR Hydra. FAN 1 / 5	1
007	64.02134.00	SHOCK ABSORBER, 10x40x15	2
008	48.02512.00	ROD. D8x170	2
009	711.10000.66	NUT DIN982 M10x1.5	4
010	101.10000.67	D10 WASHER DIN125	4
011	603.06025.87	SCREW DIN933 M6x25	7
012	101.06000.67	WASHER DIN125 D6	12
013	720.06000.66	NUT	5
014	603.06020.00	SCREW DIN933	4
015	112.06000.67	CIR-CLIP DIN9021 D6	4
016	603.08040.87	SCREW. M8x40	4
017	720.08000.66	NUT DIN985 M8 AUTOLOCKING	4
018	101.08000.67	WASHER DIN125 D8	8
019	105.14000.66	D14 WASHER DIN7980	1
020	701.14000.66	NUT DIN934 M14x2	1
021	48.02520.00	RADIATOR-PROTECTOR KIT	1

COMMENTAIRES

MOD.5362(B)

02. ENGINE
RADIATOR (PART 3)

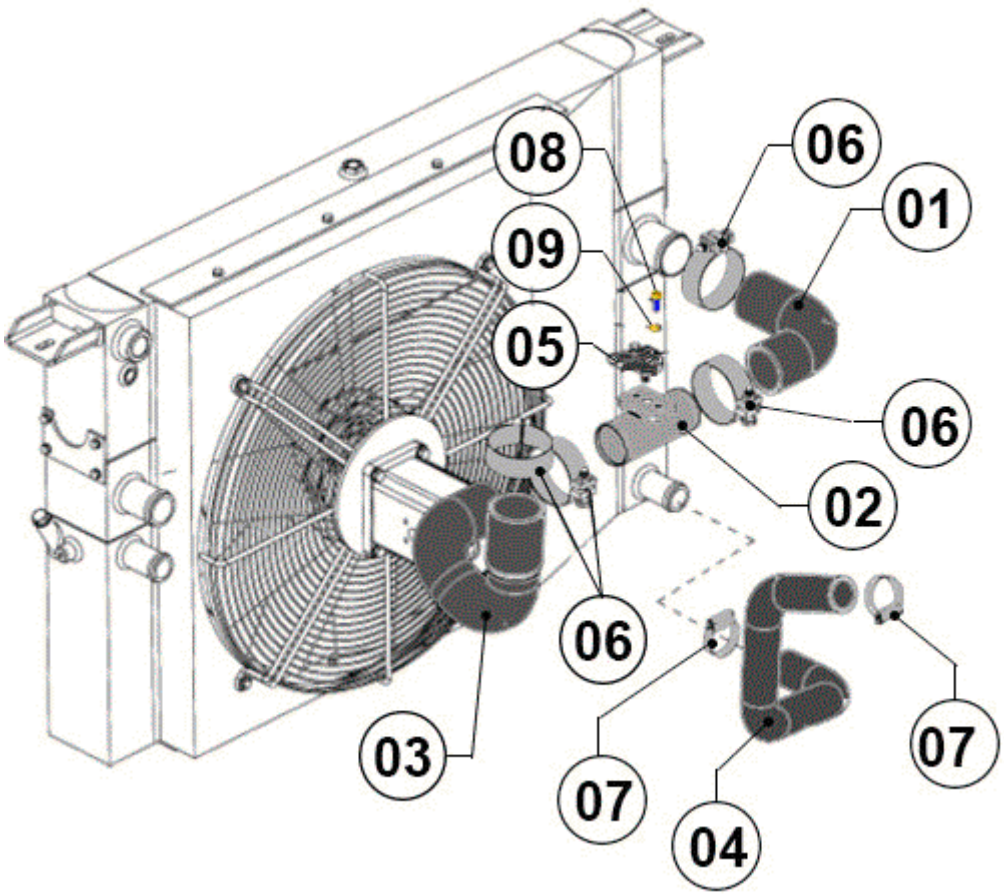

FIGURE	RÉFÉRENCE	NOM	QUANTITÉ
001	48.02305.00	D50XD60X160 TUBE	1
002	48.02306.00	TUBE MET. D47XD50X120	1
003	48.02307.00	D60XD65X153 TUBE	1
004	48.02508.00	D40XD50X336 TUBE	1
005	VW038906051C	AIR PRESSURE SENSOR G71/G72	1
006	935.59063.66	HOSE CLAMP D59-63	4
007	912.30045.00	CLAMP	2
008	603.06015.87	SCREW DIN933 M6x15	2
009	104.06000.00	WASHER DIN7980 D6	2

02. ENGINE

RADIATOR (PART 4)

CHÂSSIS: 69117

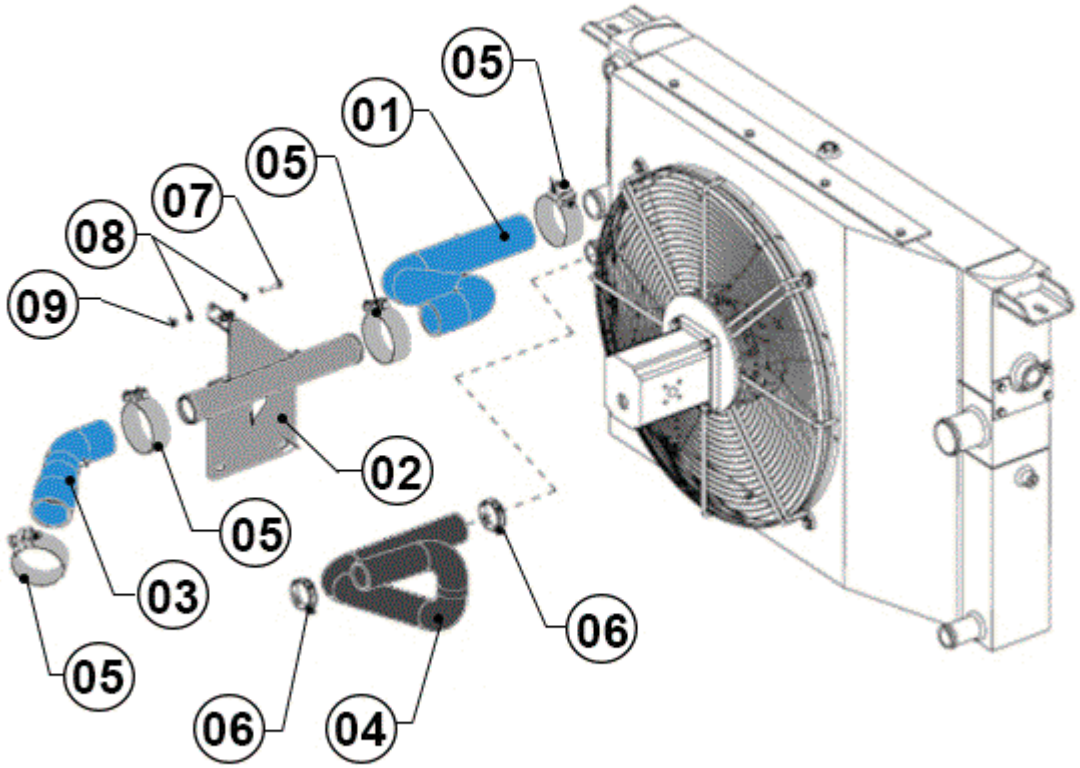

FIGURE	RÉFÉRENCE	NOM	QUANTITÉ
001	48.02304.00	D40XD50X355 SILICONE TUBE	1
002	48.02303.01	TUBE D43XD40XL295	1
003	48.02302.00	D40XD50X172 SILICONE TUBE	1
004	48.02507.00	D32XD42X404 TUBE	1
005	935.59063.66	HOSE CLAMP D59-63	4
006	962.29042.00		2
007	603.06030.87	SCREW DIN933 M6x30	2
008	101.06000.67	WASHER DIN125 D6	4
009	711.06000.66	NUT DIN982 M6	1

03. TRANSMISSION 4X2X2

HOUSINGS AND AXLES

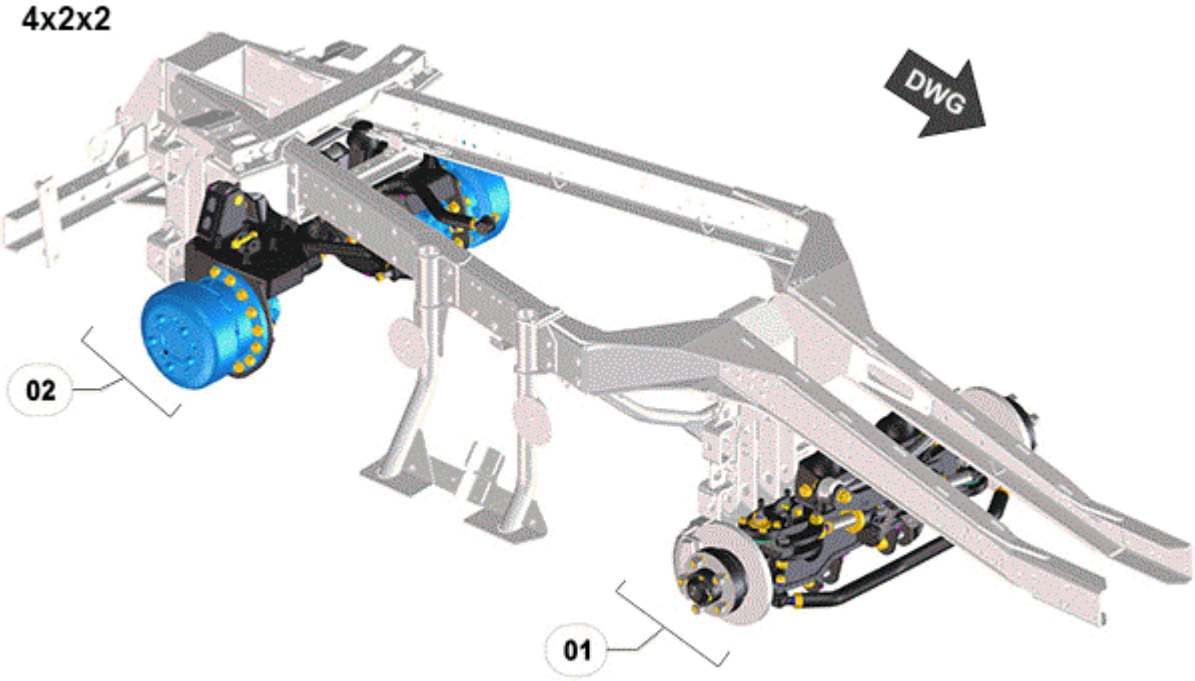

FIGURE	RÉFÉRENCE	NOM	QUANTITÉ
001	48.35400RE03	FRONT AXLE ASSEMBLY	1
002	48.33400.00	AXLE ASSEMBLY	1

03. TRANSMISSION 4X2X2

HOUSINGS AND AXLES

CHÂSSIS: 71901

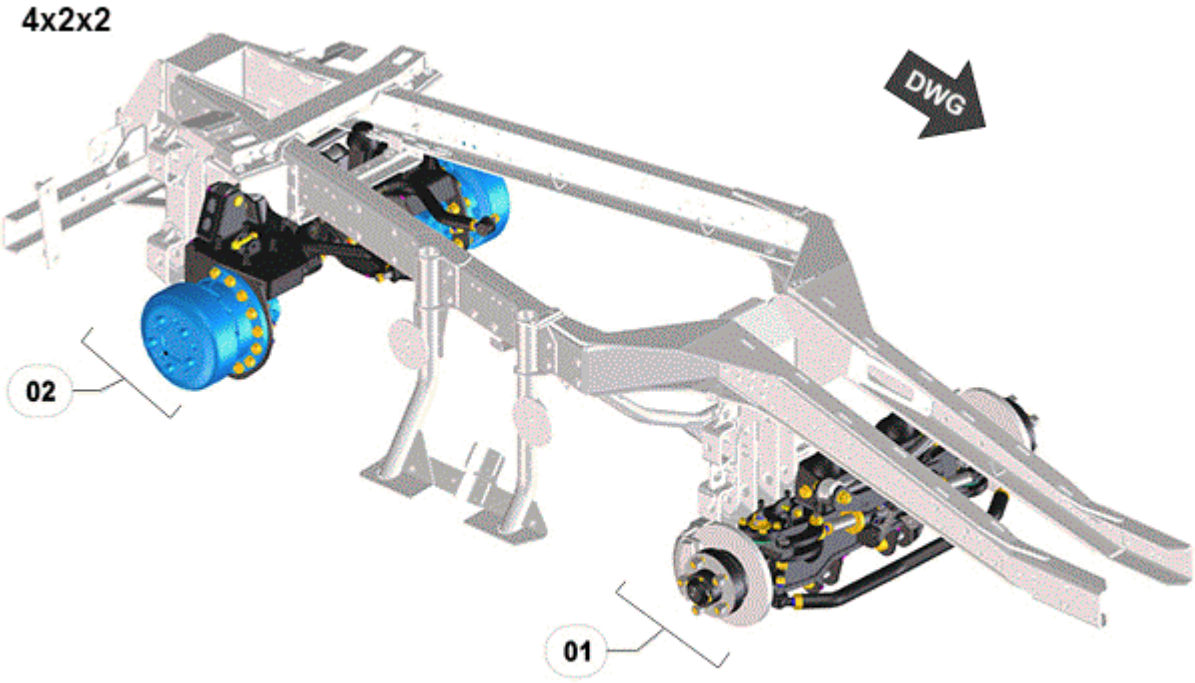

FIGURE	RÉFÉRENCE	NOM	QUANTITÉ
001	48.35400RE03	FRONT AXLE ASSEMBLY	1
002	48.33400.01	REAR AXLE SET 4X2X2	1

03. TRANSMISSION 4X2X2

HOUSINGS AND AXLES

CHÂSSIS: 75721

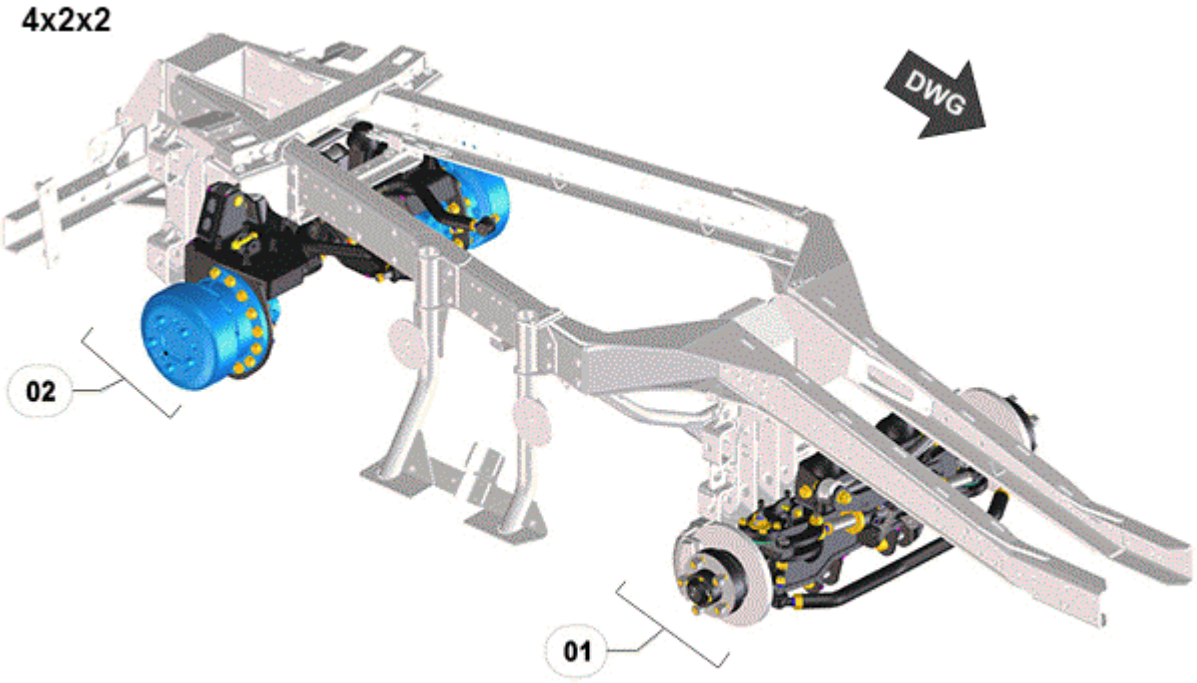

FIGURE	RÉFÉRENCE	NOM	QUANTITÉ
001	48.35400.04	REAR AXLE SET 4X2X2	1
002	48.33400.01	REAR AXLE SET 4X2X2	1

03. TRANSMISSION 4X2X2

FRONT AXLE (1)

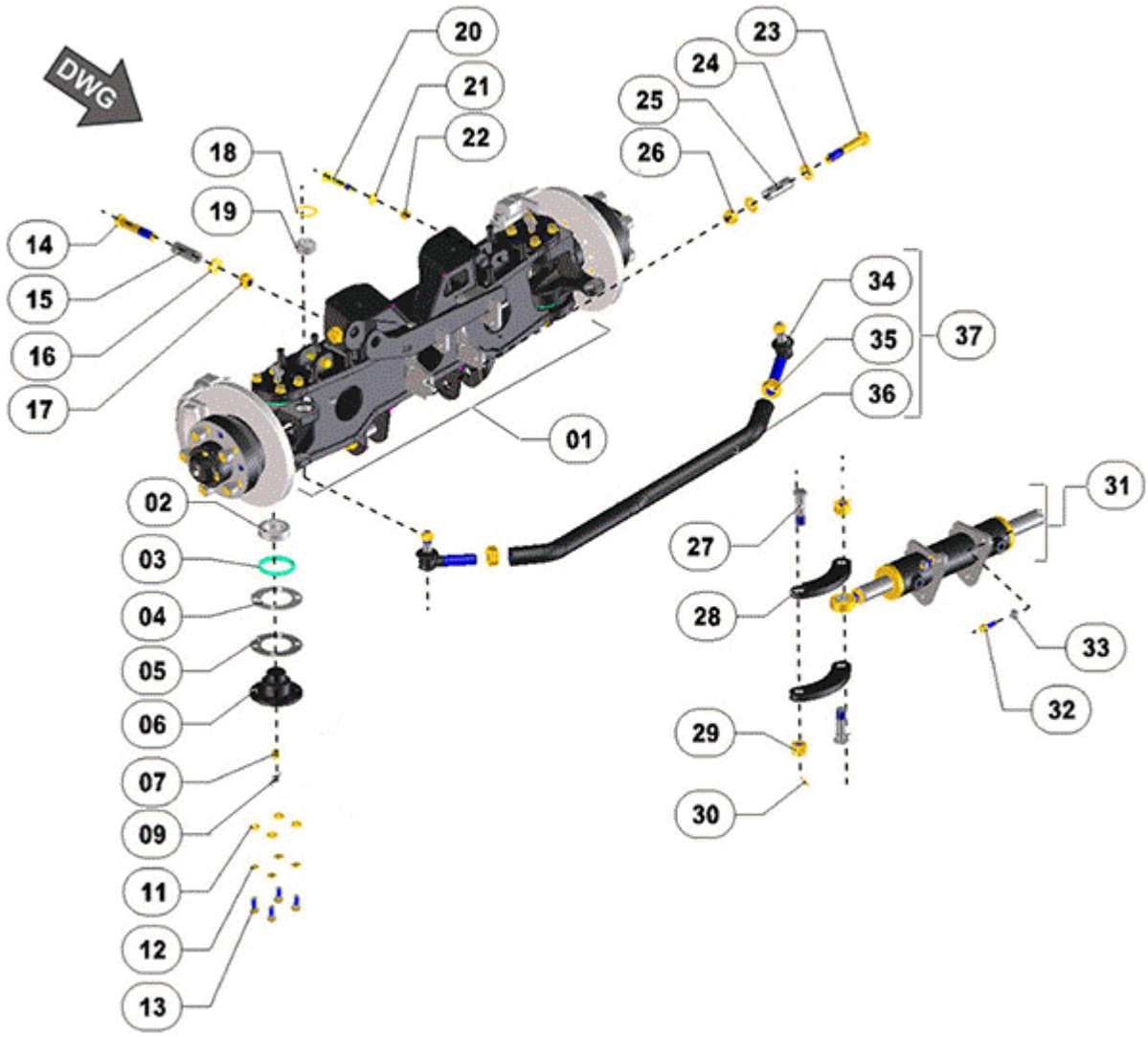

FIGURE	RÉFÉRENCE	NOM	QUANTITÉ
001	48.03540.02	AXLE GUIDELINE	1
002	925.40019.00	HEAD. D40XD68X19 GE40SX	4
003	219.58070.50	RING 58x68x7	4
004	48.03574.00	GROSS REG. DISC 110X66-E = 0.1	4
005	48.03569.00	GROSS REG. DISC 110X66-0, 25	4
006	48.03570.00	SHAFT CIL/CIL D40XD110X54.5	4
007	48.03405.00	FITTING M/M 1/8 BSP M8X1.25	4
008	48.03406.00	FITTING H / H / H und 1 / 8-1 / 8-M10X1	4
009	945.18000.33	ENGRAS. DIN71412-A 1/8 GAS	4
010	48.03407.00	DISCHARGE VALVE GREASE M10X1	4
011	101.10000.67	D10 WASHER DIN125	16
012	104.10000.00	WASHER DIN7980 D10	4
013	617.10025.87	SCREW DIN960 M10X25X1.25	4
014	48.03305.00	REDUCED HEAD SCREW DIN 931	1

015	46.03450.00	CAP Ø18.5xØ25x70	1
016	101.18000.67	BEARING DIN125 M18	1
017	711.18000.66	NUT DIN982 M18	1
018	914.42000.00	42 BR RING DIN2200 D1	1
019	941.20028.01	BALL JOINT. GE 20 FO-2RS INA	1
020	48.03586.00	SPECIAL SCREW DIN 931 M12X74	2
021	101.12000.67	WASHER DIN 125 D12	2
022	711.12000.66	NUT DIN982 M12	2
023	604.18100.87	SCREW DIN 931 M18X100	1
024	101.18000.67	BEARING DIN125 M18	2
025	46.03450.00	CAP Ø18.5xØ25x70	1
026	711.18000.67	NUT DIN982 M18	1
027	48.03566.00	SHAFT CIL/ROS D20X78	2
028	48.03565.00	D20-D20X150 CURVE ROD	2
029	710.20000.67	NUT DIN935 M20x1,5	2
030	401.04030.60	SPLIT PIN DIN94 4x30	2
031	48.06220.00	CYLINDER D / E 50X570	1
032	601.10030.87	SCREW. DIN912 M10x30	4
033	711.10000.66	NUT DIN982 M10x1.5	4
034	16.01023.00	L BALL	2
035	708.24000.67	NUT DIN934 M24x1.5	2
036	48.06231.00	BAR. UNION D40X755 WHEELS	1

03. TRANSMISSION 4X2X2

FRONT AXLE (1)

FIGURE	RÉFÉRENCE	NOM	QUANTITÉ
037	48.06230.00	BAR UNION WHEELS D40X755	1

03. TRANSMISSION 4X2X2

FRONT AXLE (1)

CHÂSSIS: 67427

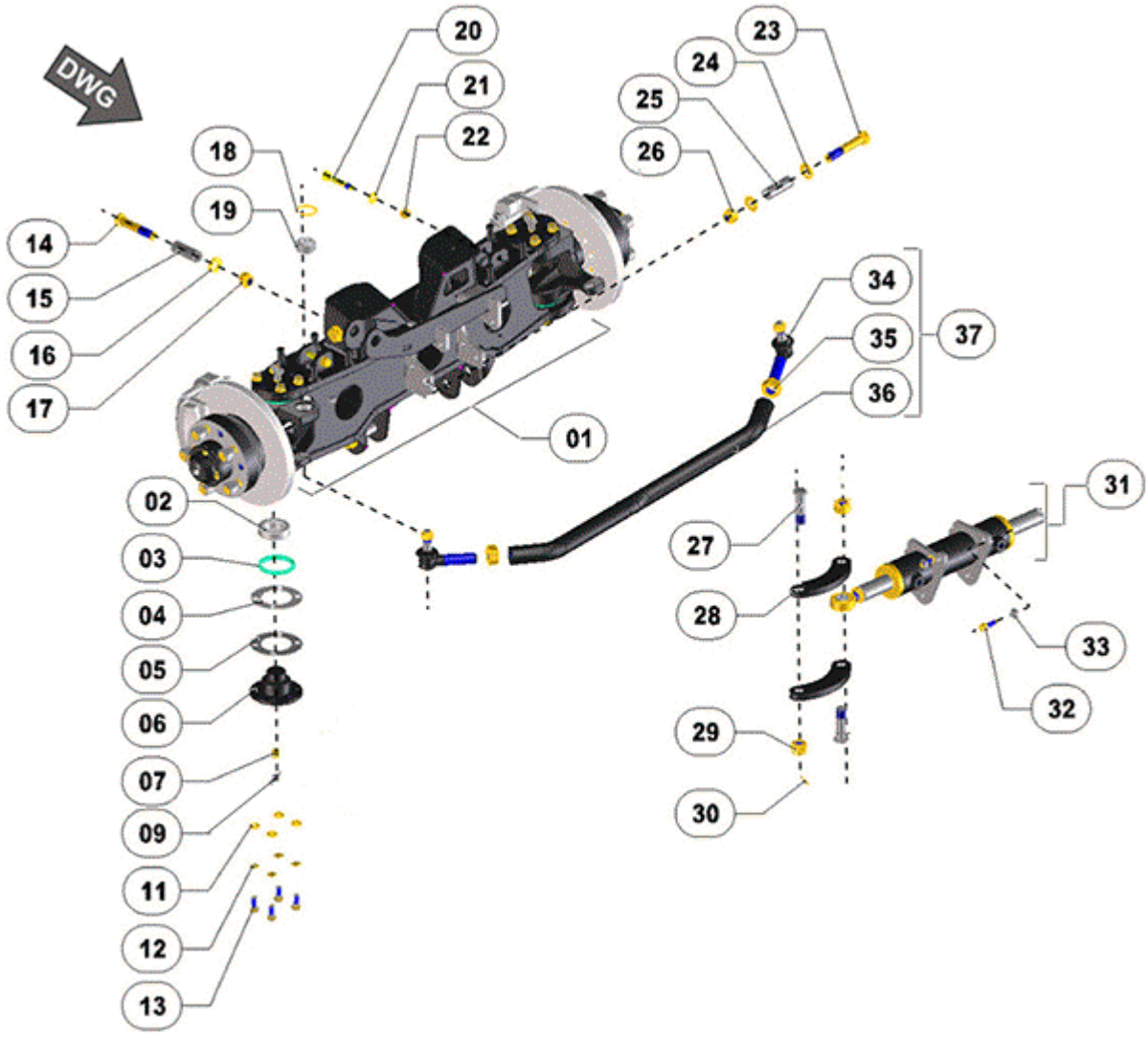

FIGURE	RÉFÉRENCE	NOM	QUANTITÉ
001	48.03540.02	AXLE GUIDELINE	1
002	925.40019.00	HEAD. D40XD68X19 GE40SX	4
003	219.58070.50	RING 58x68x7	4
004	48.03574.00	GROSS REG. DISC 110X66-E = 0.1	4
005	48.03569.00	GROSS REG. DISC 110X66-0, 25	4
006	48.03570.00	SHAFT CIL/CIL D40XD110X54.5	4
007	48.03405.00	FITTING M/M 1/8 BSP M8X1.25	4
008	48.03406.00	FITTING H / H / H und 1 / 8-1 / 8-M10X1	4
009	945.18000.33	ENGRAS. DIN71412-A 1/8 GAS	4
010	48.03407.00	DISCHARGE VALVE GREASE M10X1	4
011	101.10000.67	D10 WASHER DIN125	16
012	104.10000.00	WASHER DIN7980 D10	4
013	617.10025.87	SCREW DIN960 M10X25X1.25	4
014	48.03305.00	REDUCED HEAD SCREW DIN 931	1

015	46.03450.00	CAP Ø18.5xØ25x70	1
016	101.18000.67	BEARING DIN125 M18	1
017	711.18000.66	NUT DIN982 M18	1
018	914.42000.00	42 BR RING DIN2200 D1	1
019	941.20028.01	BALL JOINT. GE 20 FO-2RS INA	1
020	48.03586.00	SPECIAL SCREW DIN 931 M12X74	2
021	101.12000.67	WASHER DIN 125 D12	2
022	711.12000.66	NUT DIN982 M12	2
023	604.18100.87	SCREW DIN 931 M18X100	1
024	101.18000.67	BEARING DIN125 M18	2
025	46.03450.00	CAP Ø18.5xØ25x70	1
026	711.18000.67	NUT DIN982 M18	1
027	48.03566.00	SHAFT CIL/ROS D20X78	2
028	48.03565.00	D20-D20X150 CURVE ROD	2
029	710.20000.67	NUT DIN935 M20x1,5	2
030	401.04030.60	SPLIT PIN DIN94 4x30	2
031	48.06220.01	CYLINDER D/E 50X580	1
032	601.10030.87	SCREW. DIN912 M10x30	4
033	711.10000.66	NUT DIN982 M10x1.5	4
034	16.01023.00	L BALL	2
035	708.24000.67	NUT DIN934 M24x1.5	2
036	48.06231.00	BAR. UNION D40X755 WHEELS	1

03. TRANSMISSION 4X2X2

FRONT AXLE (1)

CHÂSSIS: 67427

FIGURE	RÉFÉRENCE	NOM	QUANTITÉ
037	48.06230.00	BAR UNION WHEELS D40X755	1

03. TRANSMISSION 4X2X2

FRONT AXLE (1)

CHÂSSIS: 69945

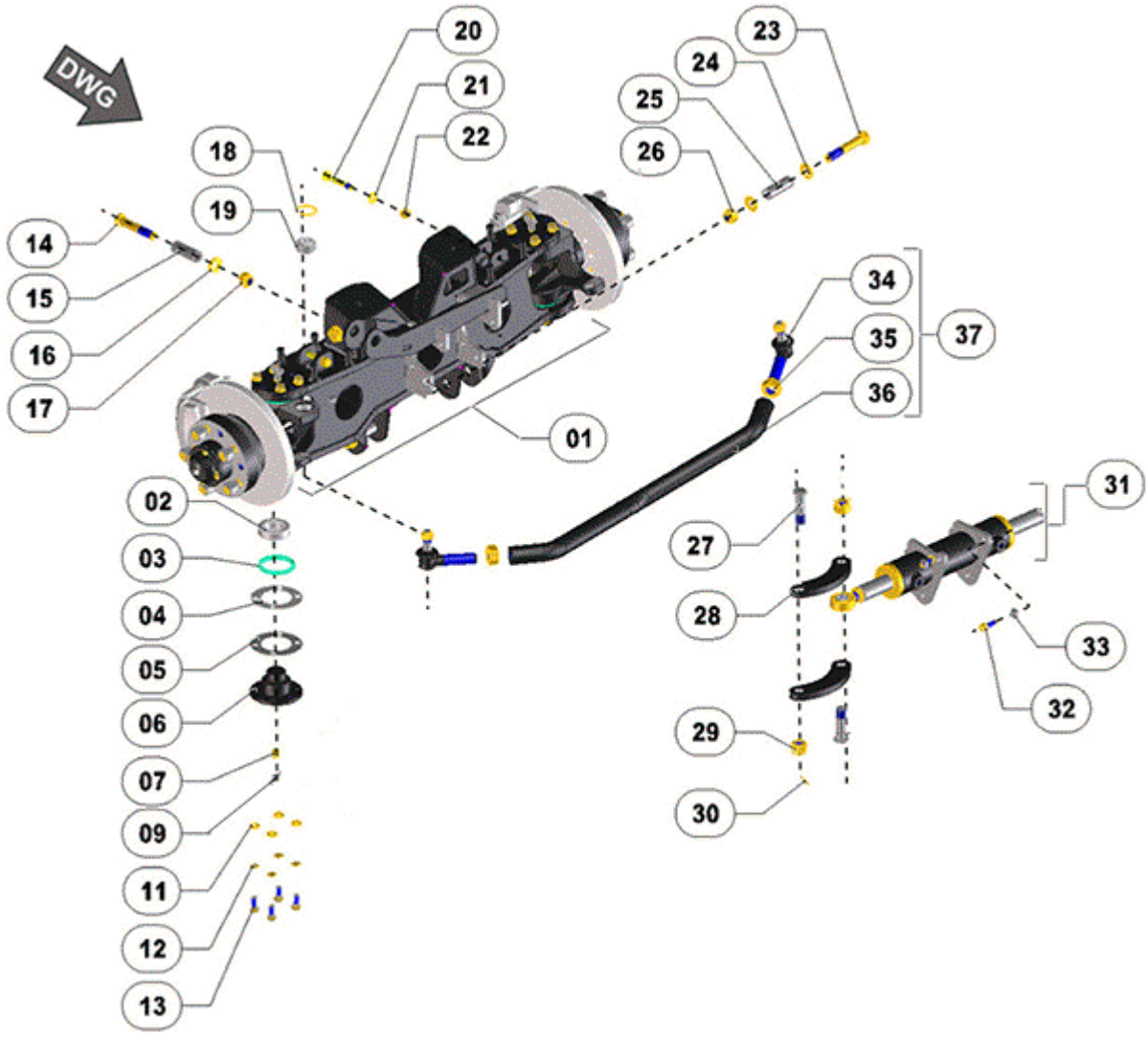

FIGURE	RÉFÉRENCE	NOM	QUANTITÉ
000	48.35400RE03	FRONT AXLE ASSEMBLY	1
001	48.03540.03	AXLE GUIDELINE	1
002	925.40019.00	HEAD. D40XD68X19 GE40SX	4
003	219.58070.50	RING 58x68x7	4
004	48.03574.00	GROSS REG. DISC 110X66-E = 0.1	4
005	48.03569.00	GROSS REG. DISC 110X66-0, 25	4
006	48.03570.00	SHAFT CIL/CIL D40XD110X54.5	4
007	48.03405.00	FITTING M/M 1/8 BSP M8X1.25	4
009	901.08000.33	GREASER DIN71412-A M8x1,25	4
010	48.03407.00	DISCHARGE VALVE GREASE M10X1	4
011	101.10000.67	D10 WASHER DIN125	16
012	104.10000.00	WASHER DIN7980 D10	4
013	617.10025.87	SCREW DIN960 M10X25X1.25	4
014	48.03305.00	REDUCED HEAD SCREW DIN 931	1

015	46.03450.00	CAP Ø18.5xØ25x70	1
016	101.18000.67	BEARING DIN125 M18	1
017	711.18000.66	NUT DIN982 M18	1
018	914.42000.00	42 BR RING DIN2200 D1	1
019	941.20028.01	BALL JOINT. GE 20 FO-2RS INA	1
020	48.03586.00	SPECIAL SCREW DIN 931 M12X74	2
021	101.12000.67	WASHER DIN 125 D12	2
022	711.12000.66	NUT DIN982 M12	2
023	604.18100.87	SCREW DIN 931 M18X100	1
024	101.18000.67	BEARING DIN125 M18	2
025	46.03450.00	CAP Ø18.5xØ25x70	1
026	711.18000.67	NUT DIN982 M18	1
027	48.03566.00	SHAFT CIL/ROS D20X78	2
028	48.03565.00	D20-D20X150 CURVE ROD	2
029	710.20000.67	NUT DIN935 M20x1,5	2
030	401.04030.60	SPLIT PIN DIN94 4x30	2
031	48.06220.02	CYLINDER D / E D50X580	1
032	601.10030.87	SCREW. DIN912 M10x30	4
033	711.10000.66	NUT DIN982 M10x1.5	4
034	16.01023.00	L BALL	2
035	708.24000.67	NUT DIN934 M24x1.5	2
036	48.06231.00	BAR. UNION D40X755 WHEELS	1

03. TRANSMISSION 4X2X2

FRONT AXLE (1)

CHÂSSIS: 69945

FIGURE	RÉFÉRENCE	NOM	QUANTITÉ
037	48.06230.00	BAR UNION WHEELS D40X755	1

03. TRANSMISSION 4X2X2

FRONT AXLE (1)

CHÂSSIS: 71554

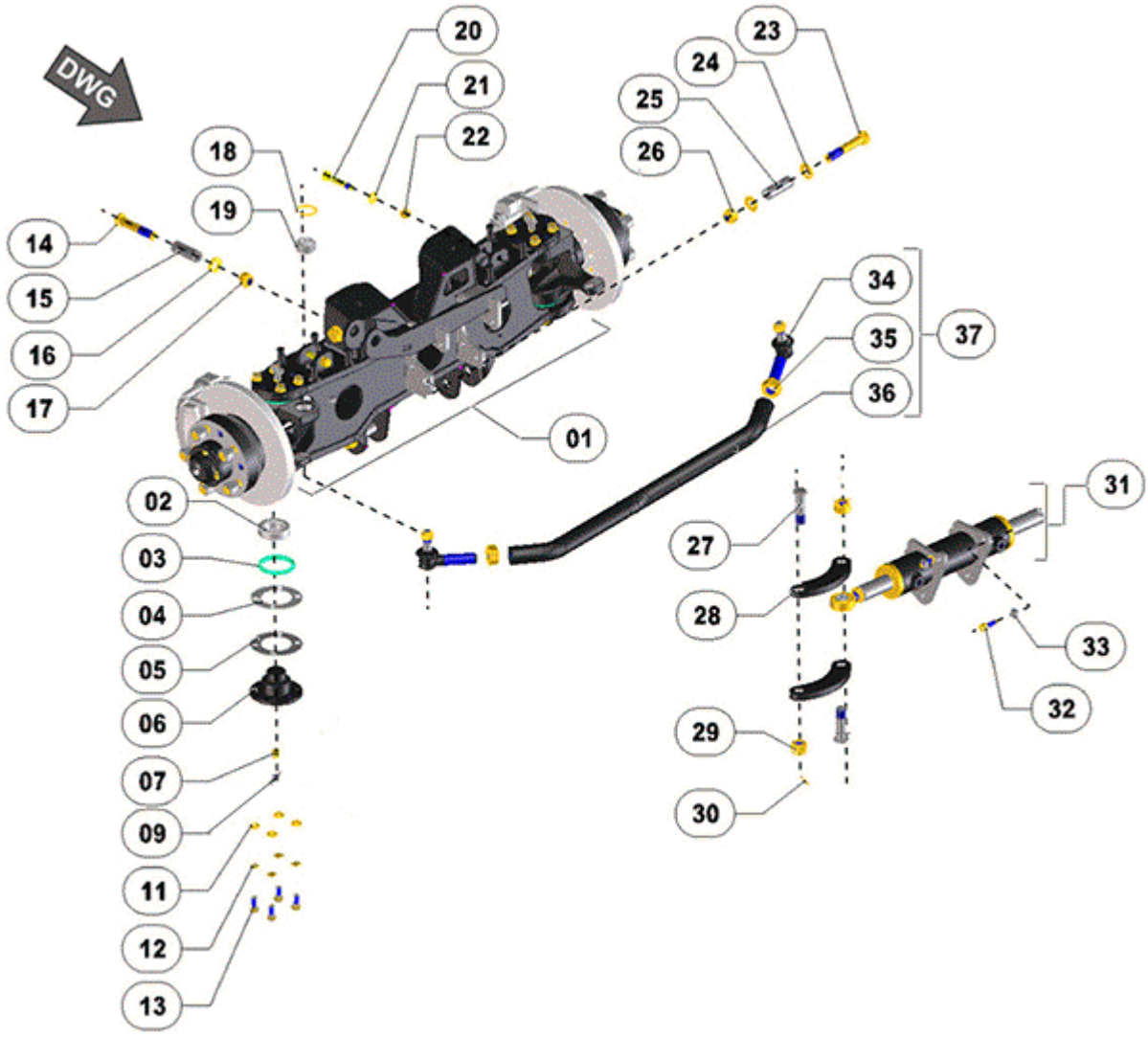

FIGURE	RÉFÉRENCE	NOM	QUANTITÉ
000	48.35400RE03	FRONT AXLE ASSEMBLY	1
001	48.03540.03	AXLE GUIDELINE	1
002	925.40019.00	HEAD. D40XD68X19 GE40SX	4
003	219.58070.50	RING 58x68x7	4
004	48.03574.00	GROSS REG. DISC 110X66-E = 0.1	4
005	48.03569.00	GROSS REG. DISC 110X66-0, 25	4
006	48.03570.00	SHAFT CIL/CIL D40XD110X54.5	4
007	48.03405.00	FITTING M/M 1/8 BSP M8X1.25	4
009	901.08000.33	GREASER DIN71412-A M8x1,25	4
010	48.03407.00	DISCHARGE VALVE GREASE M10X1	4
011	101.10000.67	D10 WASHER DIN125	16
012	104.10000.00	WASHER DIN7980 D10	4
013	617.10025.87	SCREW DIN960 M10X25X1.25	4
014	48.03305.00	REDUCED HEAD SCREW DIN 931	1

015	46.03450.00	CAP Ø18.5xØ25x70	1
016	101.18000.67	BEARING DIN125 M18	1
017	711.18000.66	NUT DIN982 M18	1
018	914.42000.00	42 BR RING DIN2200 D1	1
019	941.20028.01	BALL JOINT. GE 20 FO-2RS INA	1
020	48.03586.00	SPECIAL SCREW DIN 931 M12X74	2
021	101.12000.67	WASHER DIN 125 D12	2
022	711.12000.66	NUT DIN982 M12	2
023	604.18100.87	SCREW DIN 931 M18X100	1
024	101.18000.67	BEARING DIN125 M18	2
025	46.03450.00	CAP Ø18.5xØ25x70	1
026	711.18000.67	NUT DIN982 M18	1
027	48.03566.00	SHAFT CIL/ROS D20X78	2
028	48.03565.00	D20-D20X150 CURVE ROD	2
029	710.20000.67	NUT DIN935 M20x1,5	2
030	401.04030.60	SPLIT PIN DIN94 4x30	2
031	48.06220.02	CYLINDER D / E D50X580	1
032	601.10030.87	SCREW. DIN912 M10x30	4
033	711.10000.66	NUT DIN982 M10x1.5	4
034	16.01023.00	L BALL	2
035	708.24000.67	NUT DIN934 M24x1.5	2
036	48.06231.00	BAR. UNION D40X755 WHEELS	1

03. TRANSMISSION 4X2X2

FRONT AXLE (1)

CHÂSSIS: 71554

FIGURE	RÉFÉRENCE	NOM	QUANTITÉ
037	48.06230.00	BAR UNION WHEELS D40X755	1

03. TRANSMISSION 4X2X2

FRONT AXLE (1)

CHÂSSIS: 75721

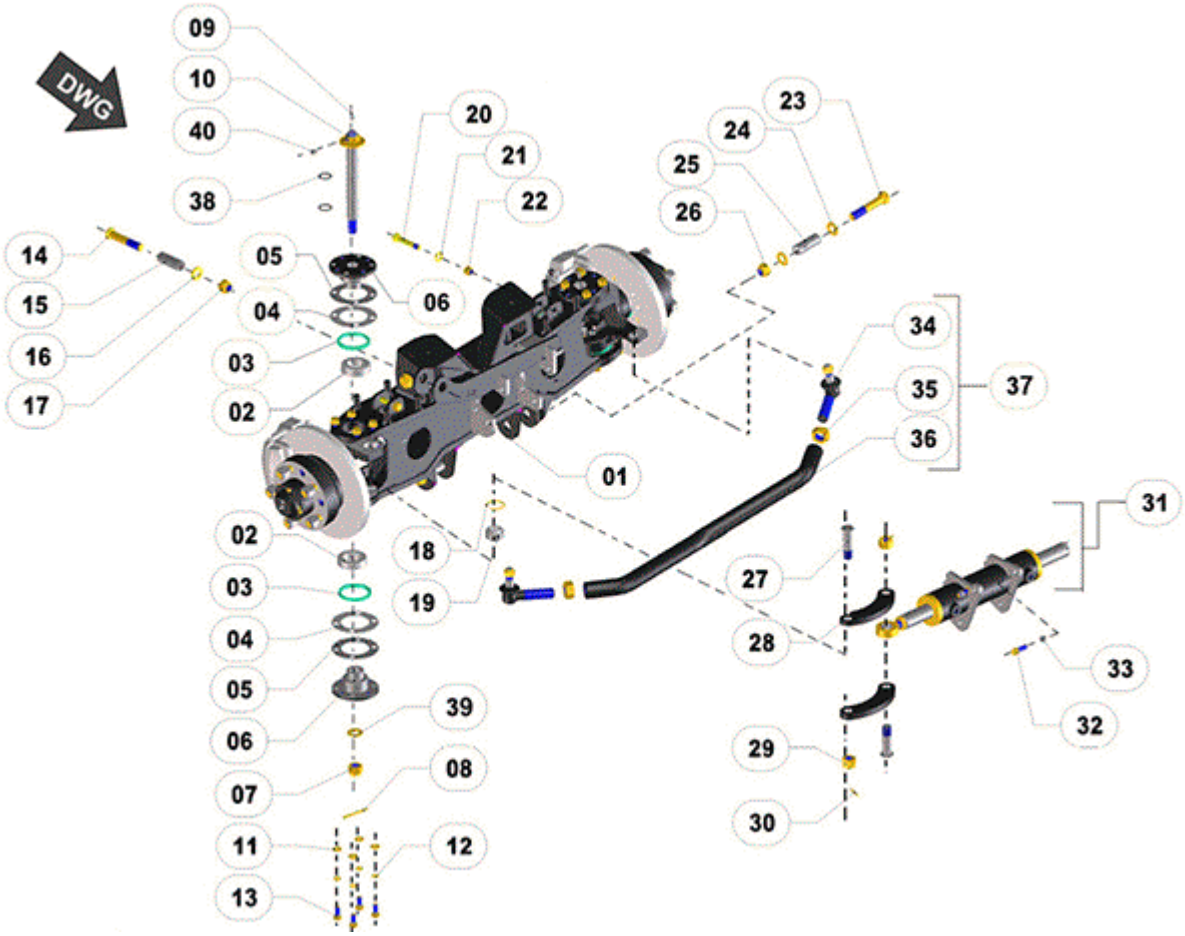

FIGURE	RÉFÉRENCE	NOM	QUANTITÉ
000	48.35400.04	REAR AXLE SET 4X2X2	1
001	48.03540.03	AXLE GUIDELINE	1
002	925.40019.00	HEAD. D40XD68X19 GE40SX	4
003	219.58070.50	RING 58x68x7	4
004	48.03574.00	GROSS REG. DISC 110X66-E = 0.1	4
005	48.03569.00	GROSS REG. DISC 110X66-0, 25	4
006	48.03570.02	AXLE D40XD110X54.5	2
007	710.20000.67	NUT DIN935 M20x1,5	2
008	401.05060.60	PIN	2
009	901.08000.33	GREASER DIN71412-A M8x1,25	2
010	48.03408.00	AXLE 25X263	2
011	101.10000.67	D10 WASHER DIN125	16
012	104.10000.00	WASHER DIN7980 D10	4
013	617.10025.87	SCREW DIN960 M10X25X1.25	4
014	48.03305.00	REDUCED HEAD SCREW DIN 931	1
015	46.03450.00	CAP Ø18.5xØ25x70	1
016	101.18000.67	BEARING DIN125 M18	1

017	711.18000.66	NUT DIN982 M18	1
018	914.42000.00	42 BR RING DIN2200 D1	1
019	941.20028.01	BALL JOINT. GE 20 FO-2RS INA	1
020	48.03586.00	SPECIAL SCREW DIN 931 M12X74	2
021	101.12000.67	WASHER DIN 125 D12	2
022	711.12000.66	NUT DIN982 M12	2
023	604.18100.87	SCREW DIN 931 M18X100	1
024	101.18000.67	BEARING DIN125 M18	2
025	46.03450.00	CAP Ø18.5xØ25x70	1
026	711.18000.67	NUT DIN982 M18	1
027	48.03566.00	SHAFT CIL/ROS D20X78	2
028	48.03565.00	D20-D20X150 CURVE ROD	2
029	710.20000.67	NUT DIN935 M20x1,5	2
030	401.04030.60	SPLIT PIN DIN94 4x30	2
031	48.06220.02	CYLINDER D / E D50X580	1
032	601.10030.87	SCREW. DIN912 M10x30	4
033	711.10000.66	NUT DIN982 M10x1.5	4
034	16.01023.00	L BALL	2
035	708.24000.67	NUT DIN934 M24x1.5	2

03. TRANSMISSION 4X2X2

FRONT AXLE (1)

CHÂSSIS: 75721

FIGURE	RÉFÉRENCE	NOM	QUANTITÉ
036	48.06231.00	BAR. UNION D40X755 WHEELS	1
037	48.06230.00	BAR UNION WHEELS D40X755	1
038	201.02453.50	JOINT DIN3770 24,5x30,5x3 (PU)	4
039	101.20000.67	WASHER DIN 125 D20	2
040	48.03407.00	DISCHARGE VALVE GREASE M10X1	2

03. TRANSMISSION 4X2X2
FRONT AXLE (2)

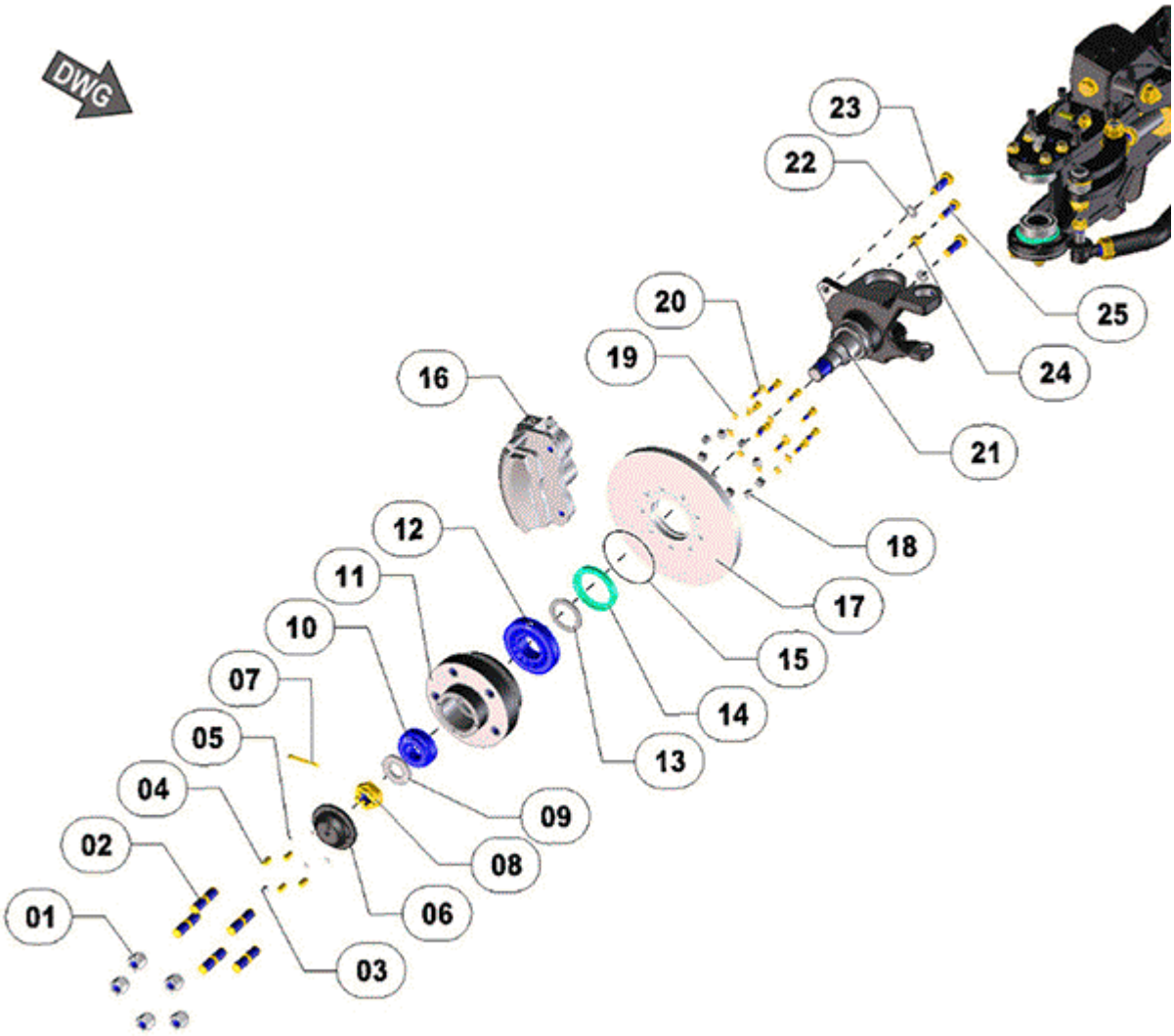

FIGURE	RÉFÉRENCE	NOM	QUANTITÉ
001	48.03573.00	NUT IJF. WHEEL M18x1, 5	10
002	48.03572.00	STUD M18X1,5-M18X1,5	10
003	901.08000.33	GREASER DIN71412-A M8x1,25	2
004	601.05015.87	SCREW DIN912 M5x15	8
005	104.05000.00	WASHER DIN7980 D5	8
006	48.03568.00	HUB CAP FITTING 30XD91	2
007	401.06050.60	PIN	2
008	715.30000.60	NUT DIN979 M30X2	2
009	30.03550.01	WASHER D31XD60X6 FI	2
010	307.35028.00	DIN720 BEARING 33207	2
011	48.03560.00	WHEEL HUB D61XD180X100.5 5AGJ	2
012	307.50030.00	DIN720 BEARING 31310	2
013	48.03567.00	WASHER D50XD68X6 FI	2
014	205.70010.50	SEAL DIN3760 70X90X10	2

015	201.10925.50	O-RING DIN3770 109x2.5	2
016L	48.05160.00	BRAKE CALIPER SET LEFT	1
016R	48.05150.00	BRAKE CALIPER SET RIGHT	1
017	48.05170.00	BRAKE DISC D285X20	2
018	70.03461.00	BUSHING 8x13x11,3	9
019	104.08000.00	WASHER DIN7980 D8	9
020	48.03564.00	ALLEN SCREW M8X28 12.9	9
021L	48.03531.00	ROCKET LEFT 273X170.5X225.5	1
021R	48.03521.00	STUB RIGHT 273X192X243	1
022	104.14000.00	CIR-CLIP EXT. DIN7980	4
023	620.14040.87	SCREW DIN961 M14X1.5X40	4

03. TRANSMISSION 4X2X2

FRONT AXLE (2)

CHÂSSIS: 68724

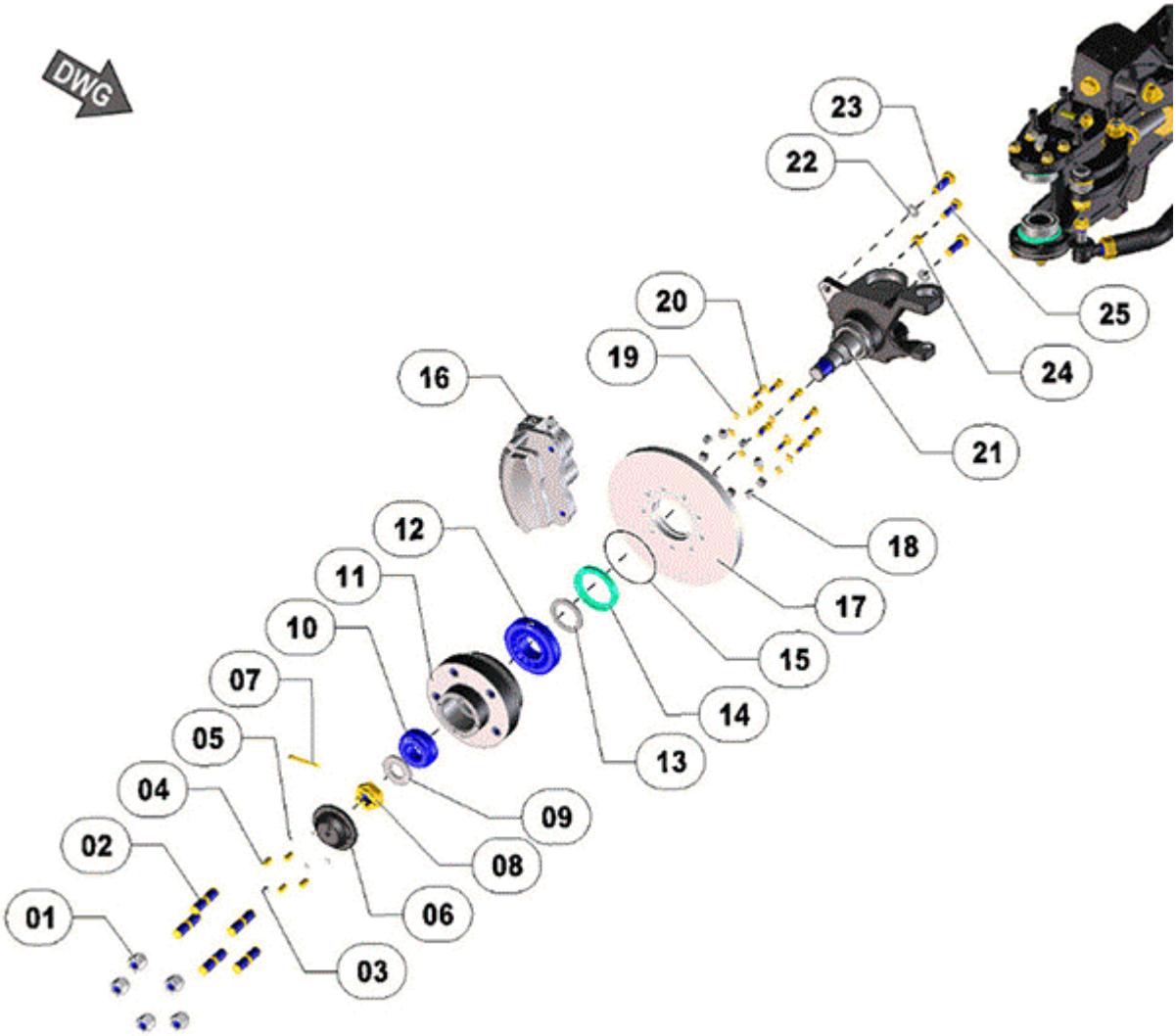

FIGURE	RÉFÉRENCE	NOM	QUANTITÉ
001	48.03573.00	NUT IJF. WHEEL M18x1, 5	10
002	48.03572.00	STUD M18X1,5-M18X1,5	10
003	901.08000.33	GREASER DIN71412-A M8x1,25	2
004	601.05015.87	SCREW DIN912 M5x15	8
005	104.05000.00	WASHER DIN7980 D5	8
006	48.03568.00	HUB CAP FITTING 30XD91	2
007	401.06050.60	PIN	2
008	715.30000.60	NUT DIN979 M30X2	2
009	30.03550.01	WASHER D31XD60X6 FI	2
010	307.35028.00	DIN720 BEARING 33207	2
011	48.03560.01	WHEEL HUB D61XD180X100.5 5AGJ	2
012	307.50030.00	DIN720 BEARING 31310	2
013	48.03567.00	WASHER D50XD68X6 FI	2

014	205.70010.50	SEAL DIN3760 70X90X10	2
015	201.10925.50	O-RING DIN3770 109x2.5	2
016L	48.05160.00	BRAKE CALIPER SET LEFT	1
016R	48.05150.00	BRAKE CALIPER SET RIGHT	1
017	48.05170.00	BRAKE DISC D285X20	2
018	70.03461.00	BUSHING 8x13x11,3	9
019	104.08000.00	WASHER DIN7980 D8	9
020	48.03564.00	ALLEN SCREW M8X28 12.9	9
021L	48.03531.00	ROCKET LEFT 273X170.5X225.5	1
021R	48.03521.00	STUB RIGHT 273X192X243	1
022	104.14000.00	CIR-CLIP EXT. DIN7980	4
023	620.14040.87	SCREW DIN961 M14X1.5X40	4

03. TRANSMISSION 4X2X2

FRONT AXLE (2)

CHÂSSIS: 75721

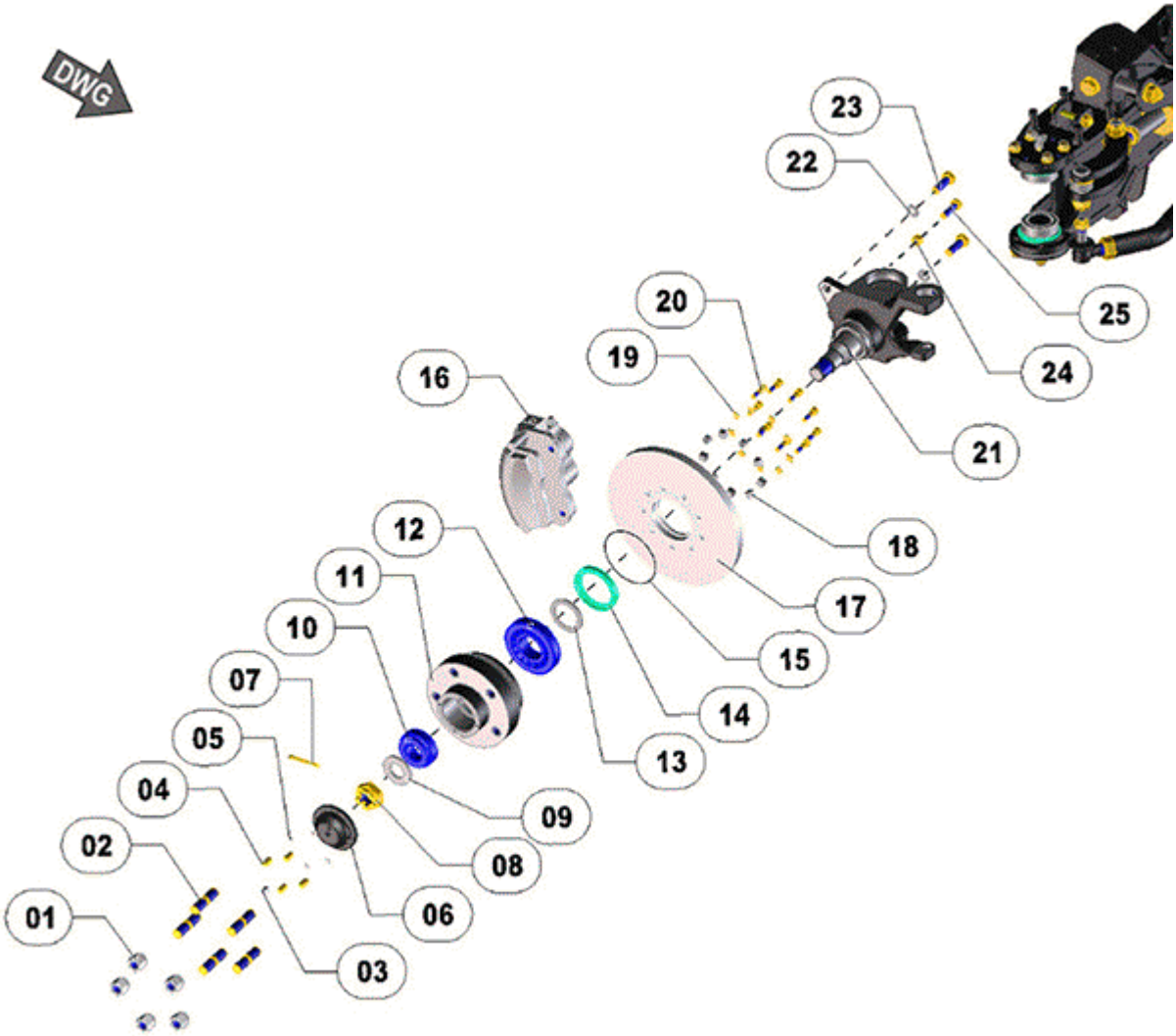

FIGURE	RÉFÉRENCE	NOM	QUANTITÉ
001	48.03573.00	NUT IJF. WHEEL M18x1, 5	10
002	48.03572.00	STUD M18X1,5-M18X1,5	10
003	901.08000.33	GREASER DIN71412-A M8x1,25	2
004	601.05015.87	SCREW DIN912 M5x15	8
005	104.05000.00	WASHER DIN7980 D5	8
006	48.03568.00	HUB CAP FITTING 30XD91	2
007	401.06050.60	PIN	2
008	715.30000.60	NUT DIN979 M30X2	2
009	30.03550.01	WASHER D31XD60X6 FI	2
010	307.35028.00	DIN720 BEARING 33207	2
011	48.03560.01	WHEEL HUB D61XD180X100.5 5AGJ	2
012	307.50030.00	DIN720 BEARING 31310	2
013	48.03567.00	WASHER D50XD68X6 FI	2

014	205.70010.50	SEAL DIN3760 70X90X10	2
015	201.10925.50	O-RING DIN3770 109x2.5	2
016L	48.05160.00	BRAKE CALIPER SET LEFT	1
016R	48.05150.00	BRAKE CALIPER SET RIGHT	1
017	48.05170.00	BRAKE DISC D285X20	2
018	70.03461.00	BUSHING 8x13x11,3	9
019	104.08000.00	WASHER DIN7980 D8	9
020	48.03564.00	ALLEN SCREW M8X28 12.9	9
021L	48.03531.01	STUB LEFT 273x192x243	1
021R	48.03521.01	STUB RIGHT 273x192x243	1
022	104.14000.00	CIR-CLIP EXT. DIN7980	4
023	620.14040.87	SCREW DIN961 M14X1.5X40	4

03. TRANSMISSION 4X2X2

REAR AXLE

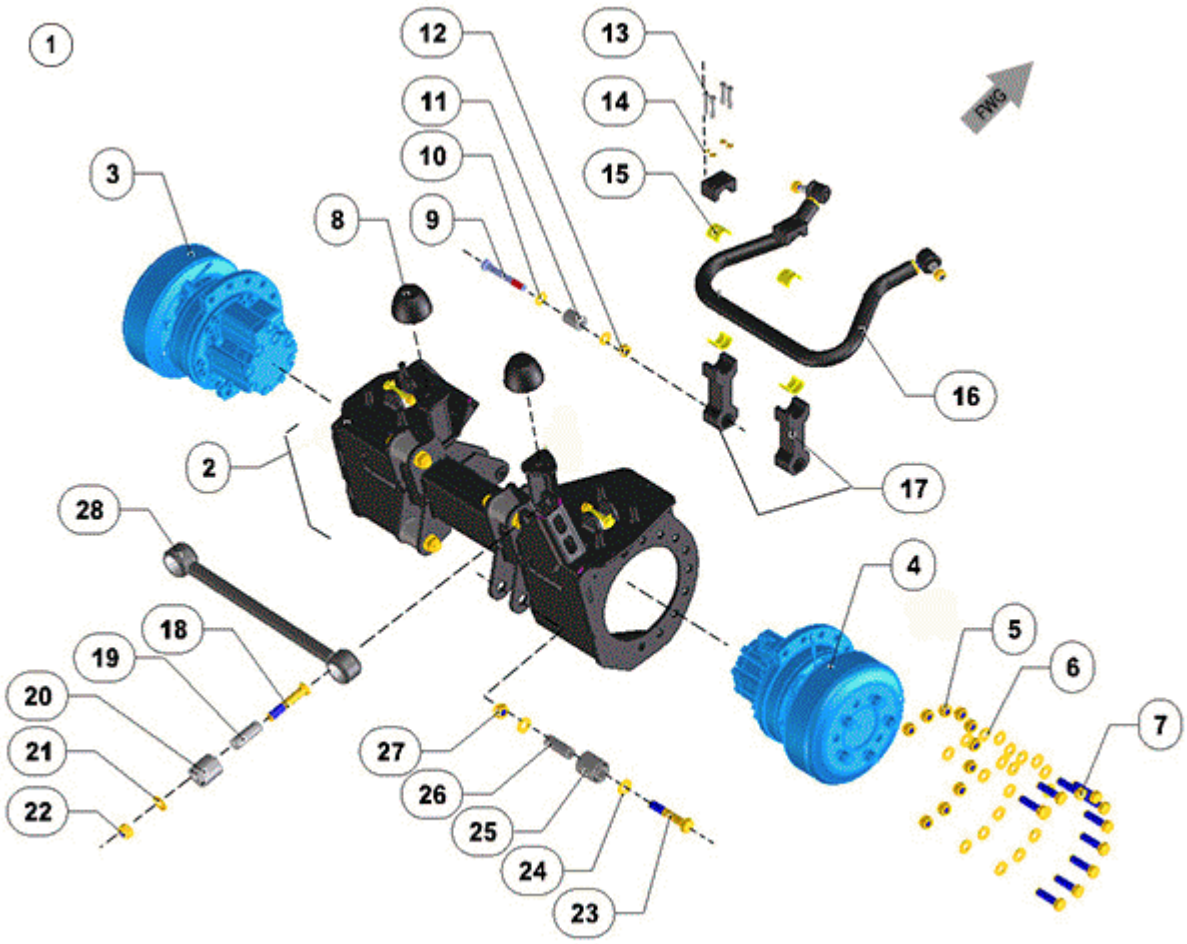

FIGURE	RÉFÉRENCE	NOM	QUANTITÉ
001	48.03350.00	BRIDGE DRIVE	1
002	48.03340.00	FIXED AXLE 795X399X411	1
003	48.03220.00	MOTOR Hydra. MCR05 REXROTH	1
004	48.03221.00	MOTOR Hydra. MCR05 REXROTH	1
005	711.16000.66	NUT DIN982 M16 8.8 K	20
006	101.16000.67	WASHER DIN125 D16	41
007	603.16055.87	SCREW M16X55	20
008	32.08021.00	PROGRESSIVE SHOCK TOP	2
009	604.14110.86	SCREW DIN931	2
010	101.14000.66	WASHER DIN125 D14	4
011	46.03430.00	BEARING CYL. D31XD14.5X42	2
012	711.14000.66	NUT DIN982 M14 8.8 K	2
013	604.08045.86	SCREW DIN931 M8x45	8
014	104.08000.00	WASHER DIN7980 D8	8
015	46.03047.05	BEARING CYLINDRICAL 30x36x35	2
016	48.04316.00	BAR. REAR STABILIZER	1
017	48.04398.00	SUPPORT 118X60X40	2

018	48.03305.00	REDUCED HEAD SCREW DIN 931	1
019	46.03450.00	CAP Ø18.5xØ25x70	1
020	46.04255.01	BUSH D25XD50X56	5
021	101.18000.67	BEARING DIN125 M18	1
022	711.18000.67	NUT DIN982 M18	1
023	604.18100.87	SCREW DIN 931 M18X100	4
025	46.04255.01	BUSH D25XD50X56	4
026	46.03450.00	CAP Ø18.5xØ25x70	4
027	711.18000.67	NUT DIN982 M18	4
028	48.04344.01	BAR. BACK PANHARD	1

03. TRANSMISSION 4X2X2

REAR AXLE

CHÂSSIS: 71901

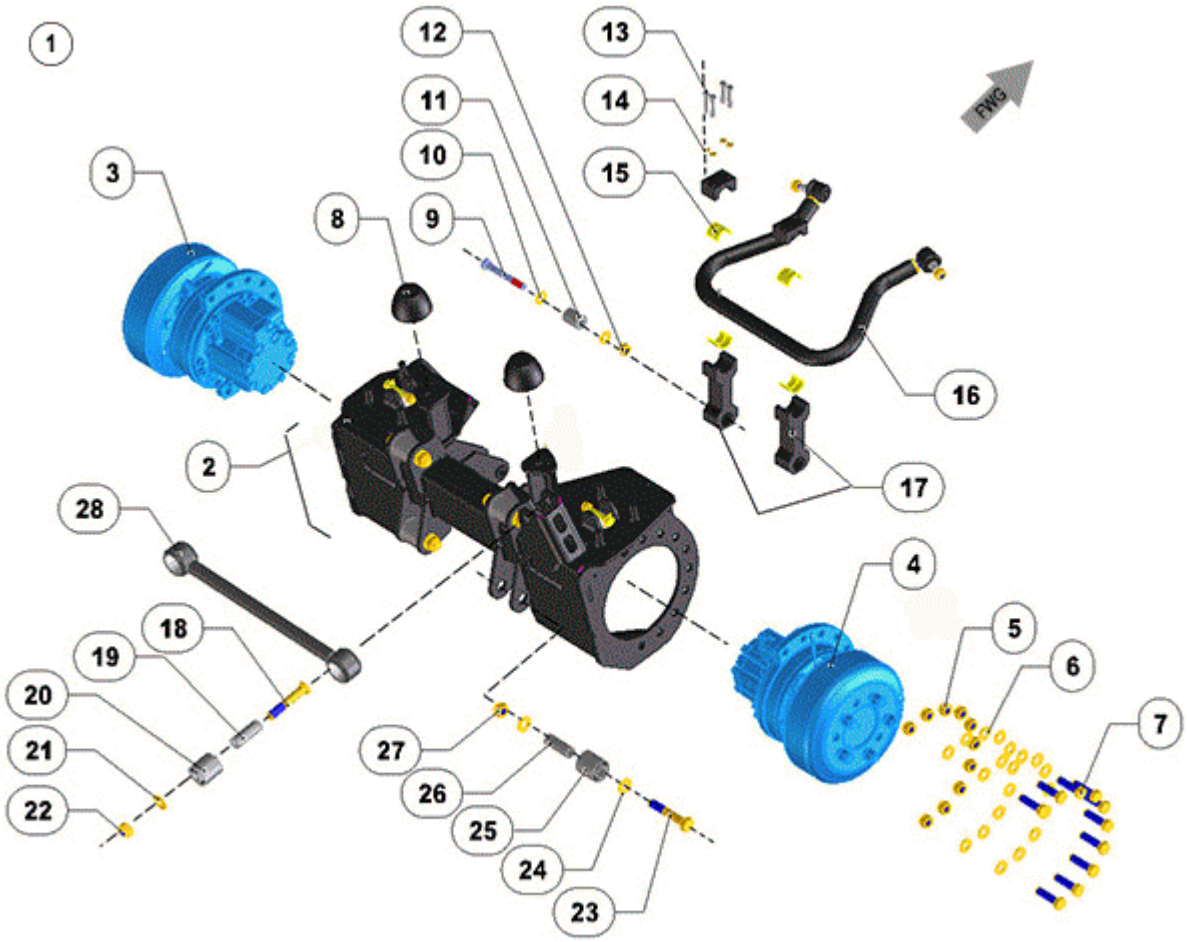

FIGURE	RÉFÉRENCE	NOM	QUANTITÉ
001	48.03350.00	BRIDGE DRIVE	1
002	48.03340.01	REAR AXLE 795X399X411	1
003	48.03220.01	HYDRAULIC MOTOR REX 4x2x2	1
004	48.03221.01	HYDRAULIC MOTOR REX 4x2x2	1
005	711.16000.66	NUT DIN982 M16 8.8 K	20
006	101.16000.67	WASHER DIN125 D16	41
007	603.16055.87	SCREW M16X55	20
008	32.08021.00	PROGRESSIVE SHOCK TOP	2
009	604.14110.86	SCREW DIN931	2
010	101.14000.66	WASHER DIN125 D14	4
011	46.03430.00	BEARING CYL. D31XD14.5X42	2
012	711.14000.66	NUT DIN982 M14 8.8 K	2
013	604.08045.86	SCREW DIN931 M8x45	8
014	104.08000.00	WASHER DIN7980 D8	8
015	46.03047.05	BEARING CYLINDRICAL 30x36x35	2
016	48.04352.00	REAR STABILISER ROD	1

017	48.04398.00	SUPPORT 118X60X40	2
018	48.03305.00	REDUCED HEAD SCREW DIN 931	1
019	46.03450.00	CAP Ø18.5xØ25x70	1
020	46.04255.01	BUSH D25XD50X56	5
021	101.18000.67	BEARING DIN125 M18	1
022	711.18000.67	NUT DIN982 M18	1
023	604.18100.87	SCREW DIN 931 M18X100	4
025	46.04255.01	BUSH D25XD50X56	4
026	46.03450.00	CAP Ø18.5xØ25x70	4
027	711.18000.67	NUT DIN982 M18	4
028	48.04344.01	BAR. BACK PANHARD	1

COMMENTAIRES

MOD.5450(A) Incorporación freno negativo

04. CHASSIS
FRONT SUSPENSION

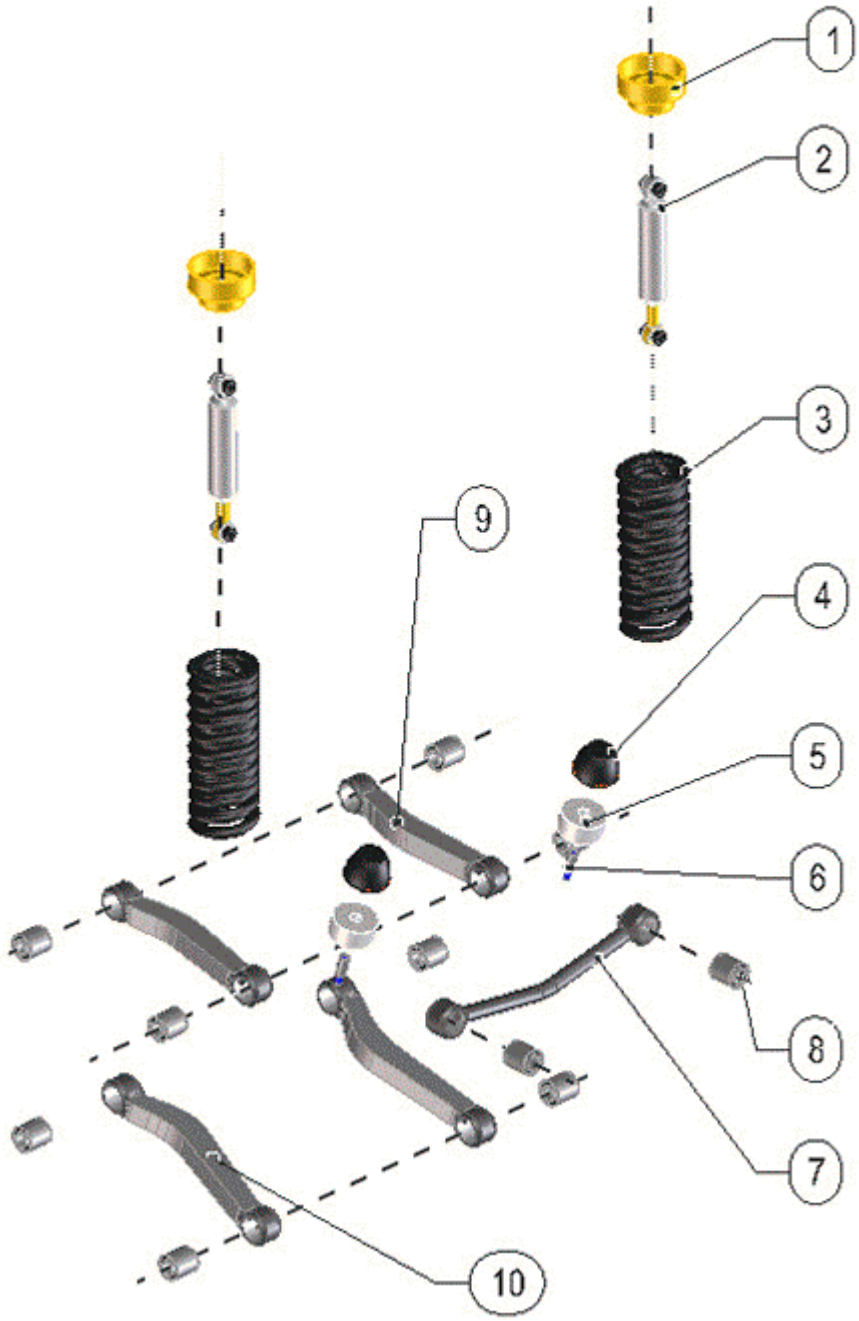

FIGURE	RÉFÉRENCE	NOM	QUANTITÉ
001	48.04178.00	SUSPENSION DRUM SEPARATOR	2
002	48.04304.00	SHOCK. D50X99	2
003	48.04311.00	SPRING COMP. 14KG/MM	2
004	32.08021.00	PROGRESSIVE SHOCK TOP	2
005	48.03591.00	THICK DISC	2
006	48.03592.00	AXIS M12-D20 CYLINDER CAP	2
007	48.04345.00	BAR. FRONT PANHARD	1

008	46.04255.01	BUSH D25XD50X56	10
009	48.04343.00	ROD 400X65X48	2
010	48.04342.00	ROD 440X65X48	2

04. CHASSIS
REAR SHOCK ABSORBER

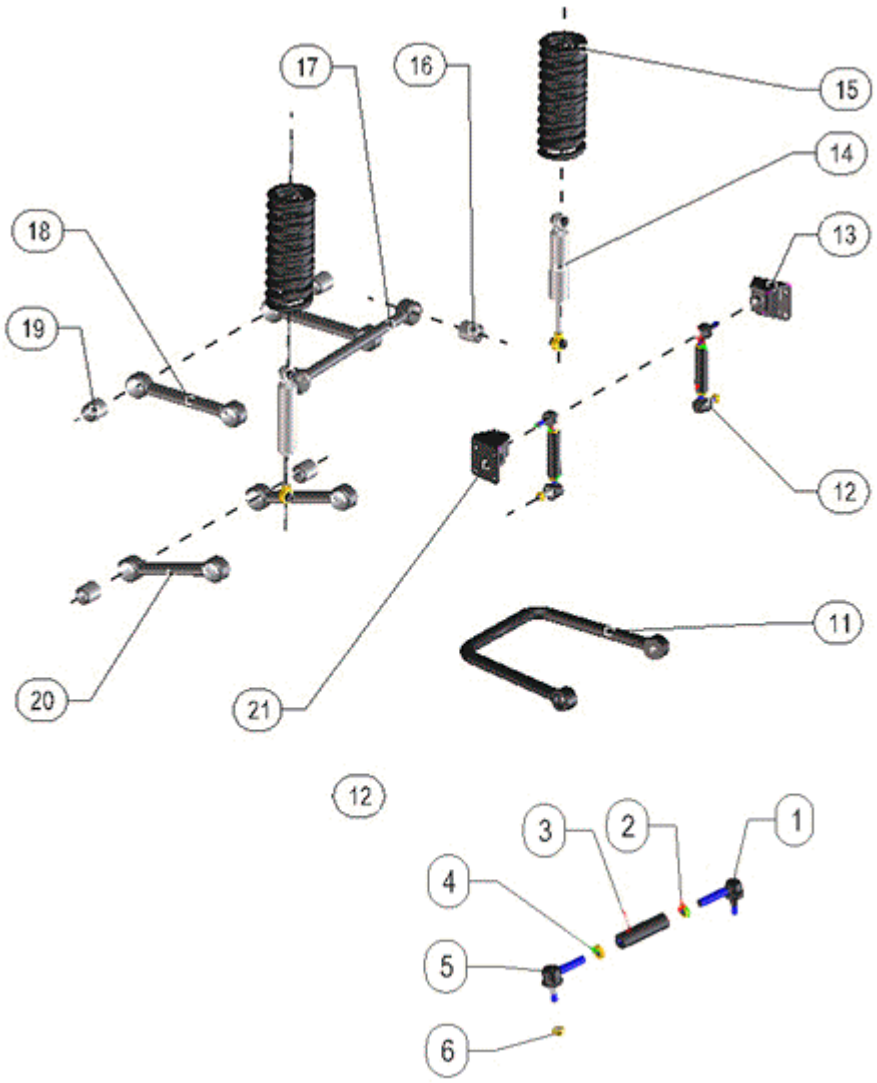

FIGURE	RÉFÉRENCE	NOM	QUANTITÉ
001	15.01018.00	L BALL	2
002	15.01019.00	NUT	2
003	48.04321.01	TUBE	1
004	709.18000.67	NUT DIN936 M18x1, 5	1
005	15.01017.00	L BALL	1
006	15.01017.00	L BALL	1
011	48.04326.02	STABILIZER BAR	1
012	48.04322.01	SWINGARM BRACKET TORSION	2
013	48.04194.01	JOINT SUPPORT LEFT TORSION	1
014	48.04323.00	SHOCK.	2
015	48.04311.00	SPRING COMP. 14KG/MM	2
016	46.04255.01	BUSH D25XD50X56	2
017	48.04344.01	BAR. BACK PANHARD	1

018	48.04341.00	ROD 365X65X48	2
019	46.04255.01	BUSH D25XD50X56	8
020	48.04340.00	ROD 342X65X48	2
021	48.04195.02	TORQUE ARTICULATION SUPPORT RIGHT	1

04. CHASSIS

REAR SHOCK ABSORBER

CHÂSSIS: 74230

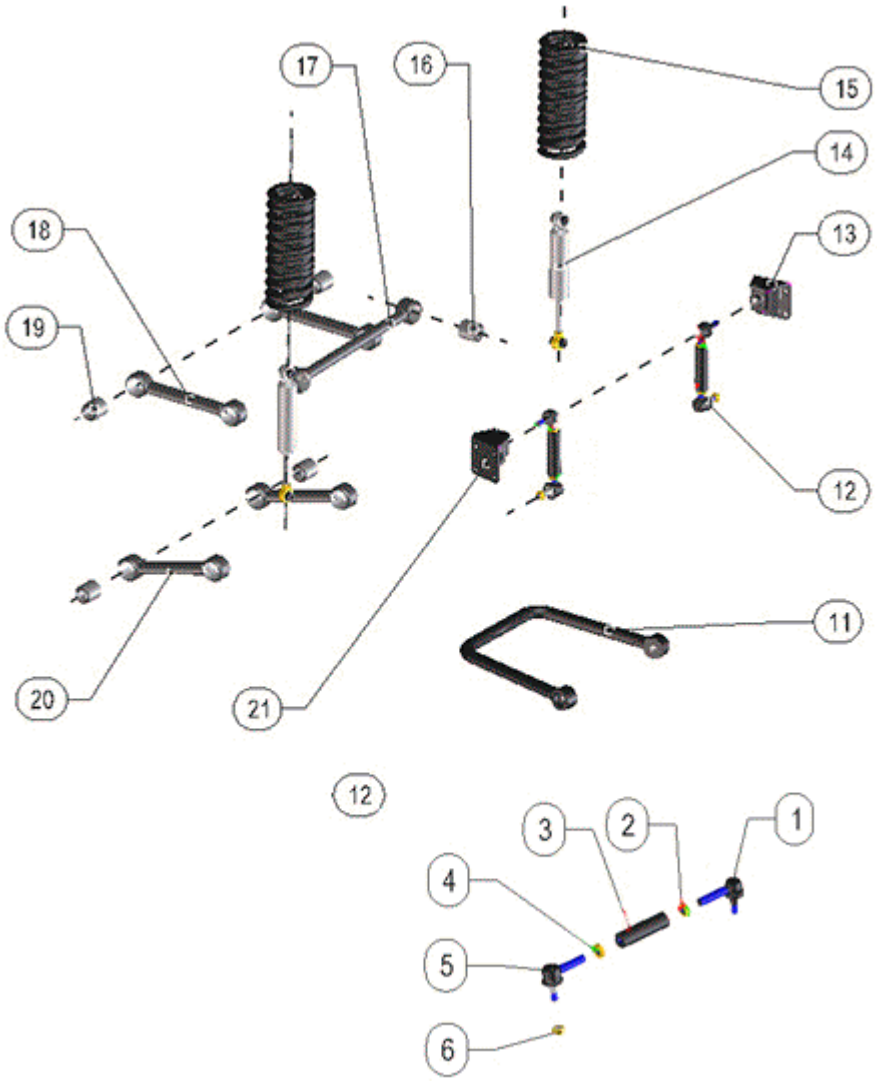

FIGURE	RÉFÉRENCE	NOM	QUANTITÉ
001	15.01018.00	L BALL	2
002	15.01019.00	NUT	2
003	48.04321.01	TUBE	1
004	709.18000.67	NUT DIN936 M18x1, 5	1
005	15.01017.00	L BALL	1
006	15.01017.00	L BALL	1
011	48.04326.02	STABILIZER BAR	1
012	48.04322.01	SWINGARM BRACKET TORSION	2
013	48.04194.01	JOINT SUPPORT LEFT TORSION	1
014	48.04323.00	SHOCK.	2
015	48.04309.00	DOCK COMP. 14 KG/MM	2
016	46.04255.01	BUSH D25XD50X56	2
017	48.04344.01	BAR. BACK PANHARD	1

018	48.04341.00	ROD 365X65X48	2
019	46.04255.01	BUSH D25XD50X56	8
020	48.04340.00	ROD 342X65X48	2
021	48.04195.02	TORQUE ARTICULATION SUPPORT RIGHT	1

OPERATION BRAKE

FOOTBRAKE (PART 1)

CHÂSSIS: 67682

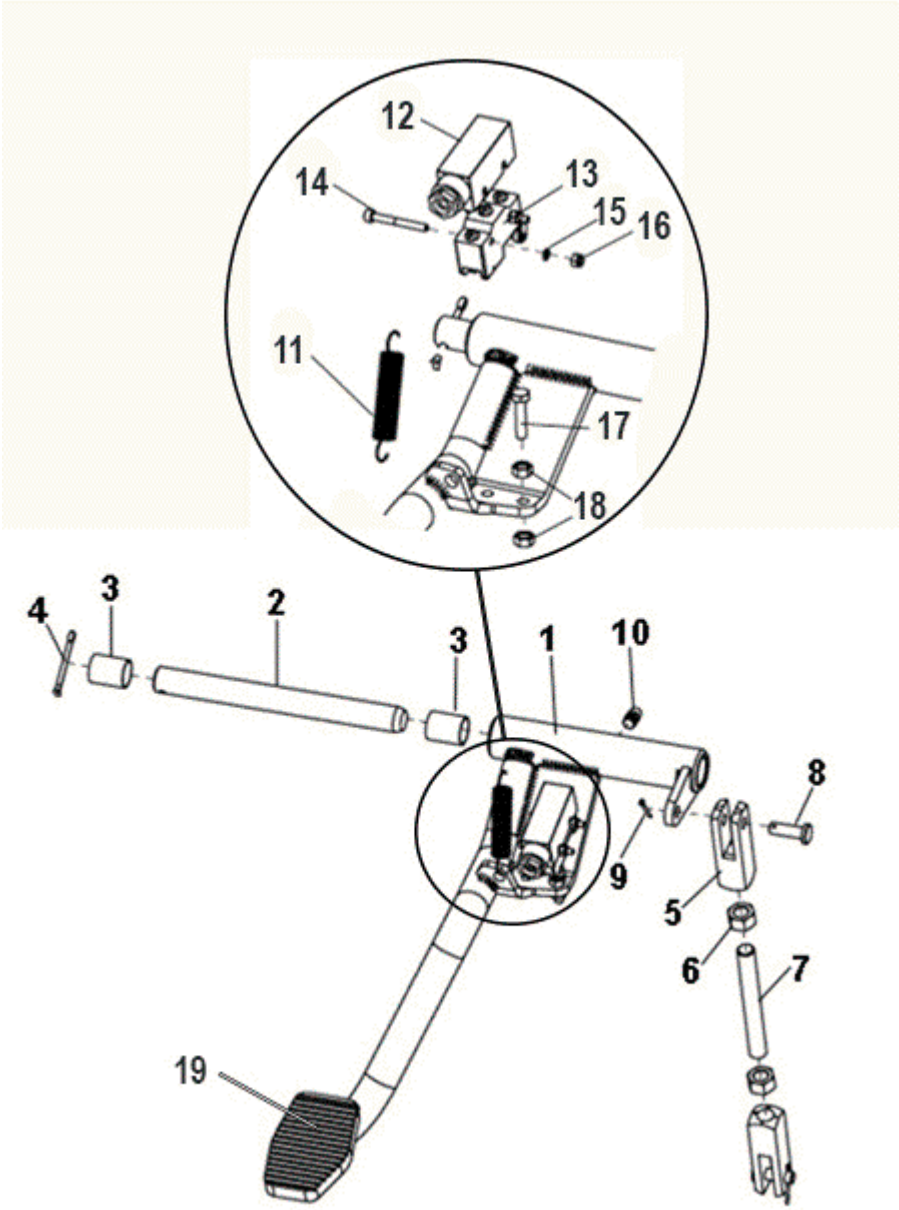

FIGURE	RÉFÉRENCE	NOM	QUANTITÉ
001	48.05112.00	BRAKE PEDAL COND. RIGHT	1
002	48.05116.00	SHAFT CIL / CIL D18X182	1
003	949.01825.00	CAP. DIN 1494 18X20X25	2
004	401.04040.60	PIN	1
005	15.00719.10	ART. FORK	2
006	701.12000.67	NUT DIN934 M12x1,75	2
006	101.04000.66	WASHER DIN125 D4	2
007	48.05117.00	STUD. M12X1, 75 L100	1
008	01.00514.01	AXLE CIL/CPA 14x8x28	2
009	401.02025.60	PIN DIN94 2x25	2

010	901.08000.33	GREASER DIN71412-A M8x1,25	1
011	01.00223.00	SPRING TENSION	1
012	60.00783.00	OMRON PROTECCION MICRO APB-PG	1
013	60.00782.00	SWITCH	1
014	601.04035.87	SCREW. DIN912 M4X35	2
015	101.04000.67	WASHER DIN125 D4	2
016	711.04000.66	NUT	2
017	603.06025.87	SCREW DIN933 M6x25	1
018	701.06000.67	NUT DIN934 M6x1	2
019	46.05502.00	PEDAL SUPPLEMENT 85X57X13	1

OPERATION BRAKE
FOOTBRAKE (PART 2)

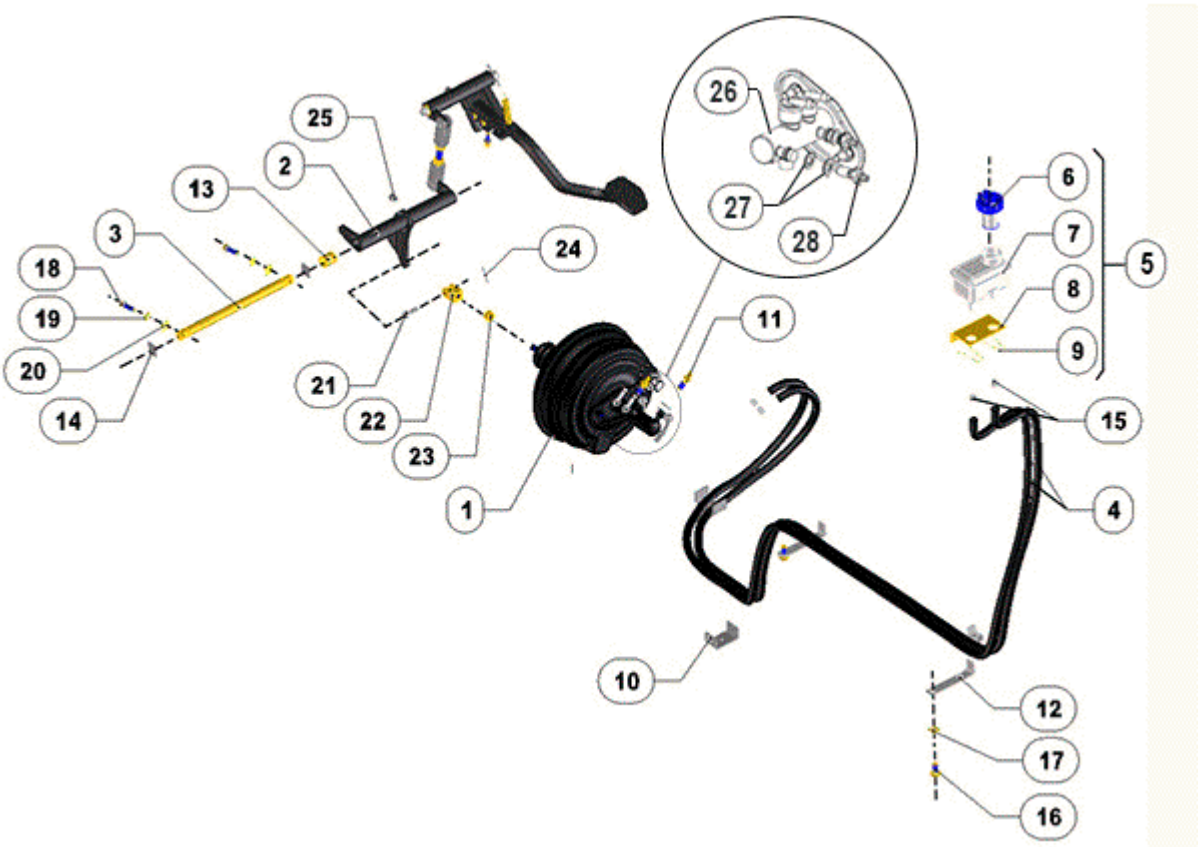

FIGURE	RÉFÉRENCE	NOM	QUANTITÉ
001	46.05042.01	SERVO BRAKE ASSY	1
002	48.05114.00	SOP. ART. BRAKE D30X233	1
003	48.05115.00	SHAFT CIL / CIL D18X261	1
004	491.01016.00	BRAKE TUBE 10x16	2
005	46.05024.00	BRAKE LIQUID ASSEMBLY	1
006	46.05022.00	CAP	1
007	46.05020.00	BRAKE LIQUIDE TANK	1
008	46.05015.00	ANGULAR SUPPORT	1
009	46.05016.00	CLIP	1
010	64.10120.00	CLAMP U-FORM	2
011	48.05119.00	ROD REC.10 M10XD8X80	2
012	48.05109.00	SOP. PAS. FOR.	2
013	949.01825.00	CAP. DIN 1494 18X20X25	2
014	904.18000.00	RING DIN471 E18	2
015	948.01308.00	SPRING CLAMP Ø13	4
016	603.10020.87	SCREW DIN933	2
017	104.10000.00	WASHER DIN7980 D10	1
018	603.08030.87	SCREW DIN933 M8x30	1
020	101.08000.67	WASHER DIN125 D8	2

021	01.00514.01	AXLE CIL/CPA 14x8x28	1
022	48.05113.00	FORK D8X25	1
023	701.12000.67	NUT DIN934 M12x1,75	1
024	401.02025.60	PIN DIN94 2x25	1
025	901.08000.33	GREASER DIN71412-A M8x1,25	1
026	46.05044.01	DOUBLE FOOT BRAKE PUMP 1 "	1
027	106.10000.20	WASHER CU 10x16x1,5 DIN7603A	4
028	48.05119.00	ROD REC.10 M10XD8X80	2

OPERATION BRAKE

FOOTBRAKE (PART 2)

CHÂSSIS: 67682

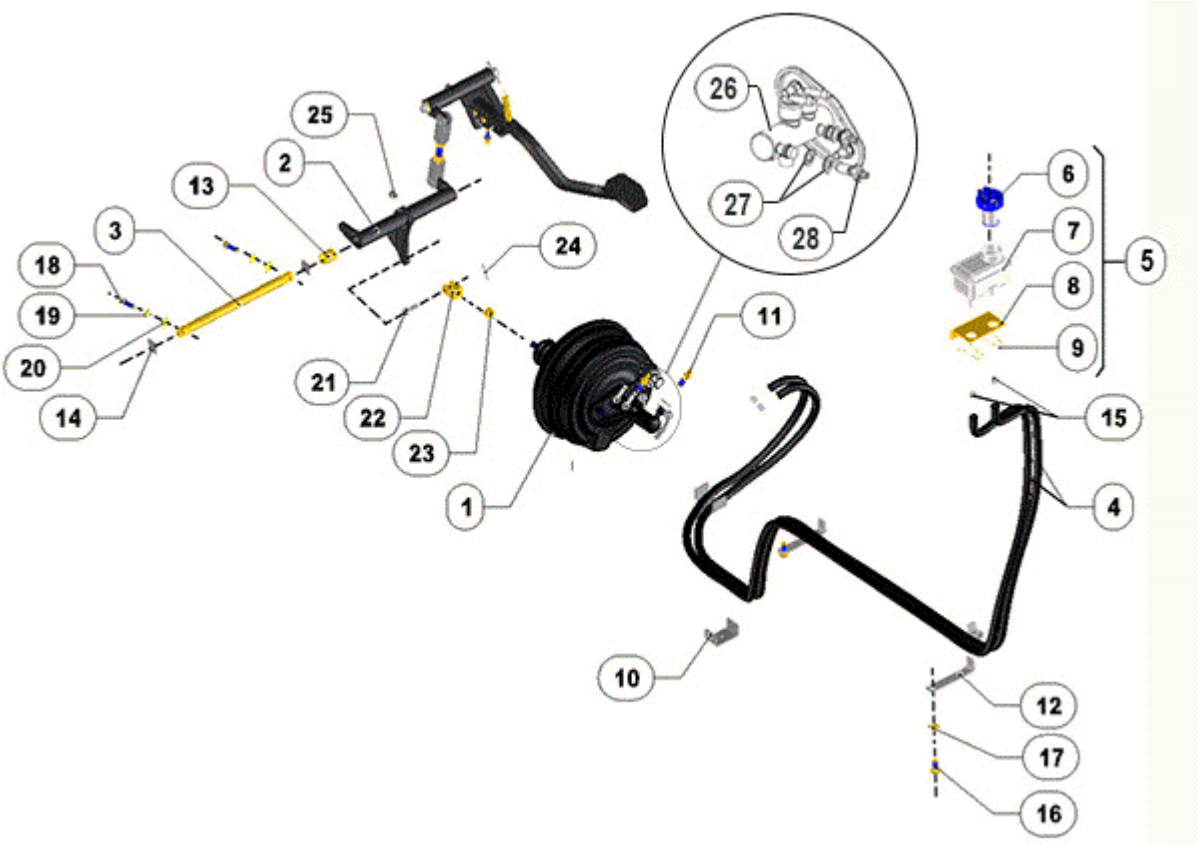

FIGURE	RÉFÉRENCE	NOM	QUANTITÉ
001	46.05042.01	SERVO BRAKE ASSY	1
002	48.05114.00	SOP. ART. BRAKE D30X233	1
003	48.05115.00	SHAFT CIL / CIL D18X261	1
004	491.01016.00	BRAKE TUBE 10x16	2
005	46.05024.00	BRAKE LIQUID ASSEMBLY	1
006	46.05022.00	CAP	1
007	46.05020.00	BRAKE LIQUIDE TANK	1
008	46.05015.00	ANGULAR SUPPORT	1
009	46.05016.00	CLIP	1
010	64.10120.00	CLAMP U-FORM	2
011	48.05119.00	ROD REC.10 M10XD8X80	2
012	48.05109.00	SOP. PAS. FOR.	2
013	949.01825.00	CAP. DIN 1494 18X20X25	2
014	904.18000.00	RING DIN471 E18	2
015	948.01308.00	SPRING CLAMP Ø13	4
016	603.10020.87	SCREW DIN933	2
017	104.10000.00	WASHER DIN7980 D10	1
018	603.08030.87	SCREW DIN933 M8x30	1
020	101.08000.67	WASHER DIN125 D8	2

021	01.00514.01	AXLE CIL/CPA 14x8x28	1
022	48.05113.00	FORK D8X25	1
022	01.00514.04	AXIS CIL / CPA 14X8X28	1
023	701.12000.67	NUT DIN934 M12x1,75	1
024	401.02025.60	PIN DIN94 2x25	1
025	901.08000.33	GREASER DIN71412-A M8x1,25	1
026	46.05044.01	DOUBLE FOOT BRAKE PUMP 1 "	1
027	106.10000.20	WASHER CU 10x16x1,5 DIN7603A	4
028	48.05119.00	ROD REC.10 M10XD8X80	2

OPERATION BRAKE

FOOTBRAKE (PART 2)

CHÂSSIS: 67975

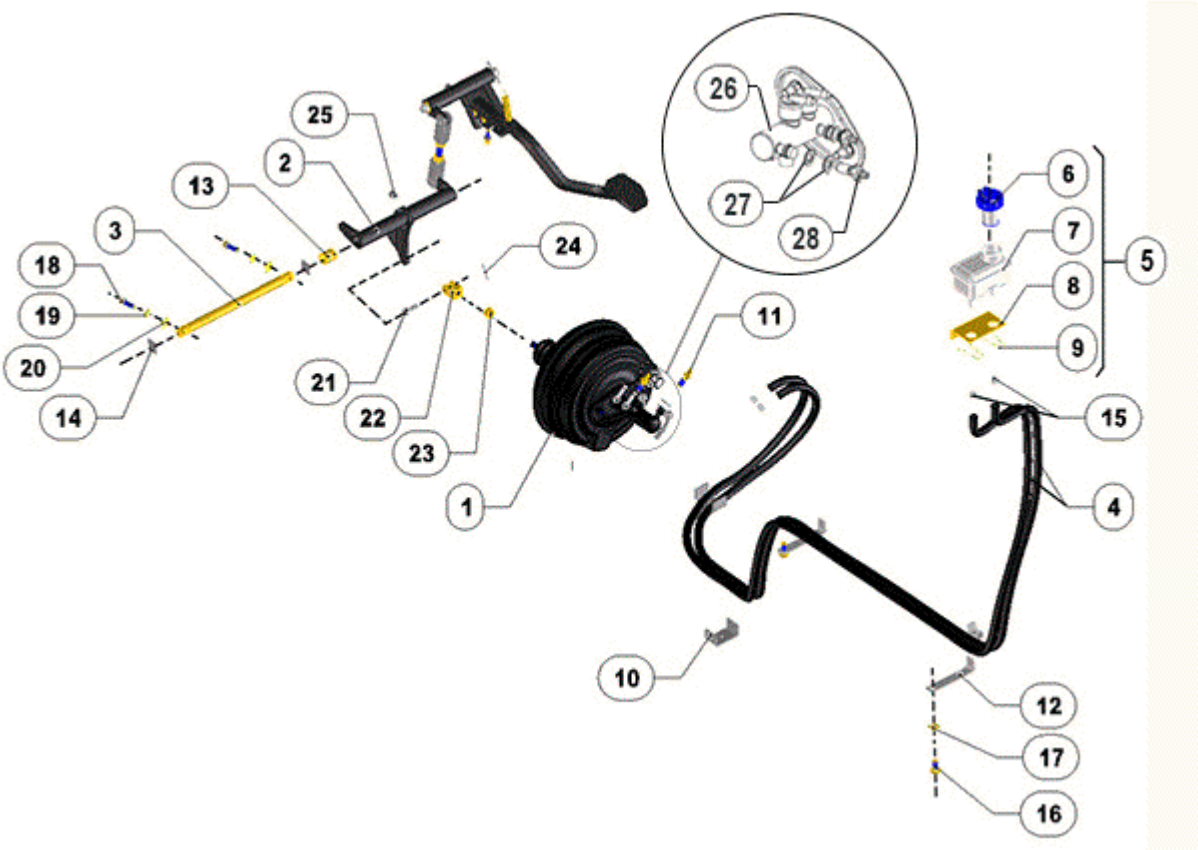

FIGURE	RÉFÉRENCE	NOM	QUANTITÉ
001	46.05042.01	SERVO BRAKE ASSY	1
002	48.05114.01	SOP. ART. BRAKE D30X233	1
003	48.05115.00	SHAFT CIL / CIL D18X261	1
004	491.01016.00	BRAKE TUBE 10x16	2
005	46.05024.00	BRAKE LIQUID ASSEMBLY	1
006	46.05022.00	CAP	1
007	46.05020.00	BRAKE LIQUIDE TANK	1
008	46.05015.00	ANGULAR SUPPORT	1
009	46.05016.00	CLIP	1
010	64.10120.00	CLAMP U-FORM	2
011	48.05119.00	ROD REC.10 M10XD8X80	2
012	48.05109.00	SOP. PAS. FOR.	2
013	923.01825.00	BEARING SEFOIL B 11 A	2
014	904.18000.00	RING DIN471 E18	2
015	948.01308.00	SPRING CLAMP Ø13	4
016	603.10020.87	SCREW DIN933	2
017	104.10000.00	WASHER DIN7980 D10	1
018	603.08030.87	SCREW DIN933 M8x30	1
020	101.08000.67	WASHER DIN125 D8	2

021	01.00514.01	AXLE CIL/CPA 14x8x28	1
022	48.05113.00	FORK D8X25	1
022	01.00514.04	AXIS CIL / CPA 14X8X28	1
023	701.12000.67	NUT DIN934 M12x1,75	1
024	401.02025.60	PIN DIN94 2x25	1
025	901.08000.33	GREASER DIN71412-A M8x1,25	1
026	46.05044.01	DOUBLE FOOT BRAKE PUMP 1 "	1
027	106.10000.20	WASHER CU 10x16x1,5 DIN7603A	4
028	48.05119.00	ROD REC.10 M10XD8X80	2

OPERATION BRAKE

FOOTBRAKE (PART 2)

CHÂSSIS: 69117

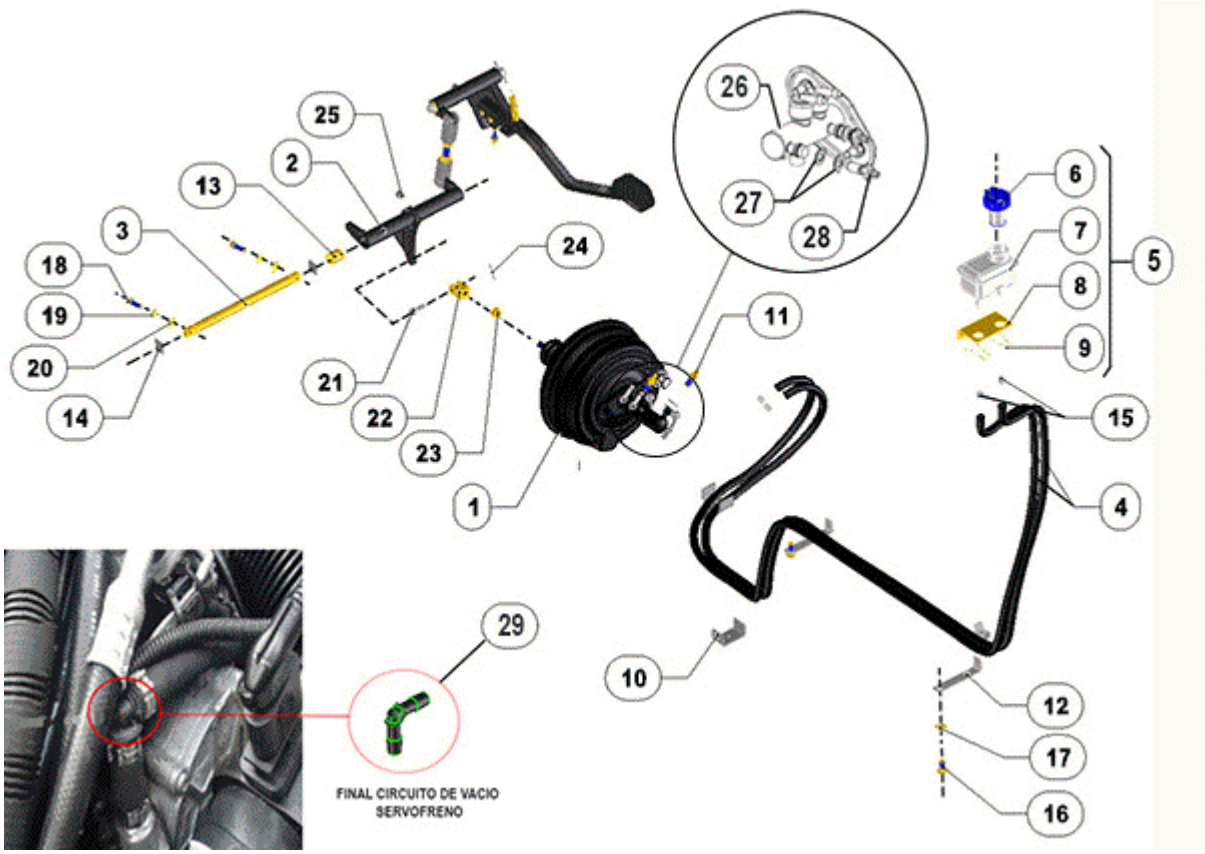

FIGURE	RÉFÉRENCE	NOM	QUANTITÉ
001	46.05042.01	SERVO BRAKE ASSY	1
002	48.05114.01	SOP. ART. BRAKE D30X233	1
003	48.05115.00	SHAFT CIL / CIL D18X261	1
004	491.01016.00	BRAKE TUBE 10x16	2
005	46.05024.00	BRAKE LIQUID ASSEMBLY	1
006	46.05022.00	CAP	1
007	46.05020.00	BRAKE LIQUIDE TANK	1
008	46.05015.00	ANGULAR SUPPORT	1
009	46.05016.00	CLIP	1
010	64.10120.00	CLAMP U-FORM	2
011	48.05119.00	ROD REC.10 M10XD8X80	2
012	48.05109.00	SOP. PAS. FOR.	2
013	923.01825.00	BEARING SEFOIL B 11 A	2
014	904.18000.00	RING DIN471 E18	2
015	948.01308.00	SPRING CLAMP Ø13	4
016	603.10020.87	SCREW DIN933	2
017	104.10000.00	WASHER DIN7980 D10	1
018	603.08030.87	SCREW DIN933 M8x30	1
020	101.08000.67	WASHER DIN125 D8	2

021	01.00514.01	AXLE CIL/CPA 14x8x28	1
022	48.05113.00	FORK D8X25	1
022	01.00514.04	AXIS CIL / CPA 14X8X28	1
023	701.12000.67	NUT DIN934 M12x1,75	1
023	48.02213.00	C90-fitting Ø10	1
024	401.02025.60	PIN DIN94 2x25	1
025	901.08000.33	GREASER DIN71412-A M8x1,25	1
026	46.05044.01	DOUBLE FOOT BRAKE PUMP 1 "	1
027	106.10000.20	WASHER CU 10x16x1,5 DIN7603A	4
028	106.10000.20	WASHER CU 10x16x1,5 DIN7603A	2
029	48.02213.00	C90-fitting Ø10	1

OPERATION BRAKE
FOOTBRAKE (PART 3)

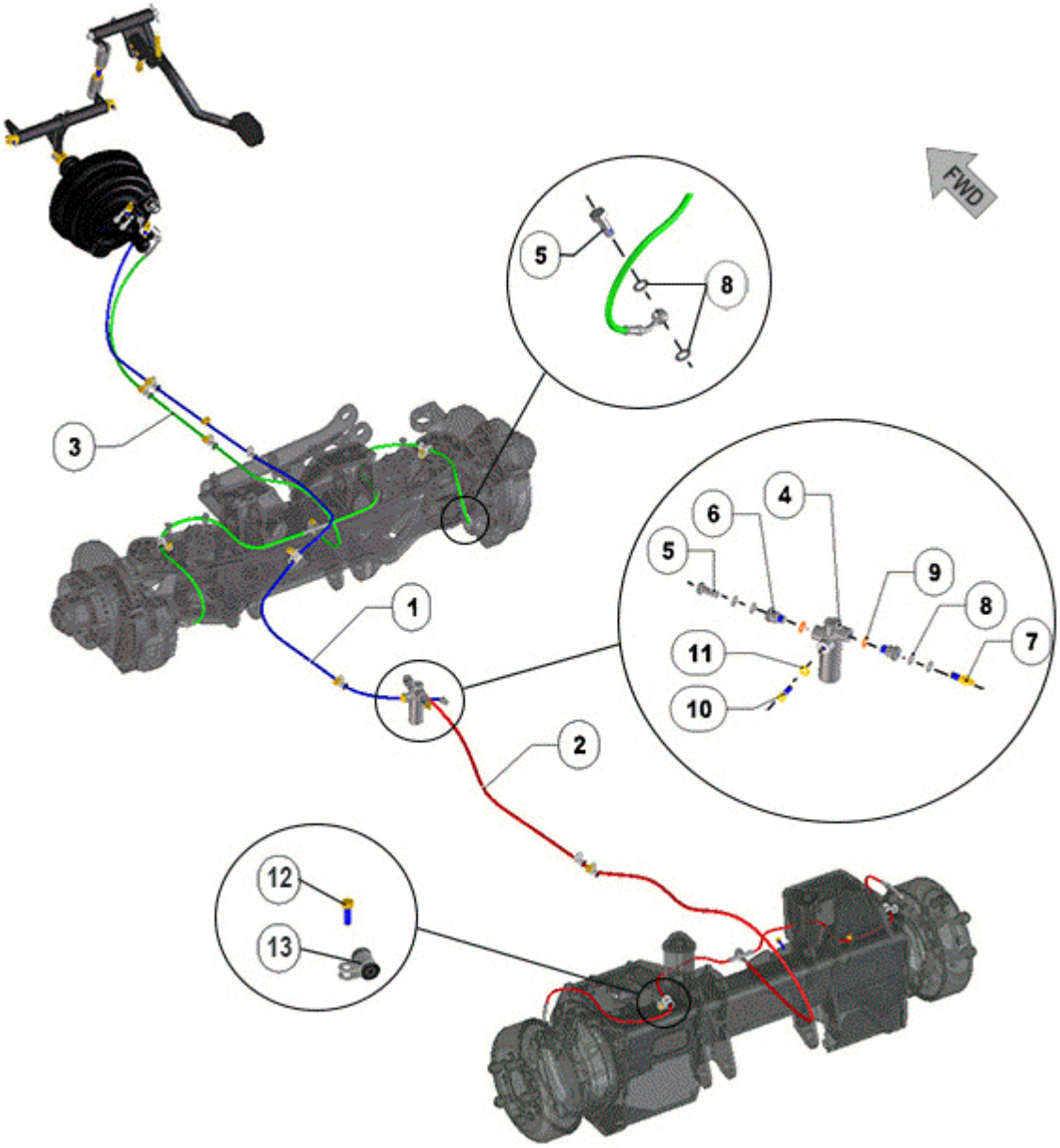

FIGURE	RÉFÉRENCE	NOM	QUANTITÉ
001	48.05135.00	REAR BRAKE HOSE	1
002	48.05134.00	REAR BRAKE HOSE	1
003	48.05132.00	BRAKE TUBE SET	1
004	48.05191.00	RELIEF VALVE BRAKE	1
005	46.01065.01	FITTING SCREW SIMPLE M10x1	3
006	46.51211.00	ELBOW M / F	2
007	48.05119.00	ROD REC.10 M10XD8X80	1
008	106.10000.20	WASHER CU 10x16x1,5 DIN7603A	12
009	106.12000.20	WASHER CU	2
010	603.08025.87	SCREW DIN933 M8x25	1
011	101.08000.67	WASHER DIN125 D8	1

012	603.06020.87	SCREW DIN933 M6x20	8
013	48.05131.00	REAR BRAKE PIPE SET	12

OPERATION BRAKE

FOOTBRAKE (PART 3)

CHÂSSIS: 70155

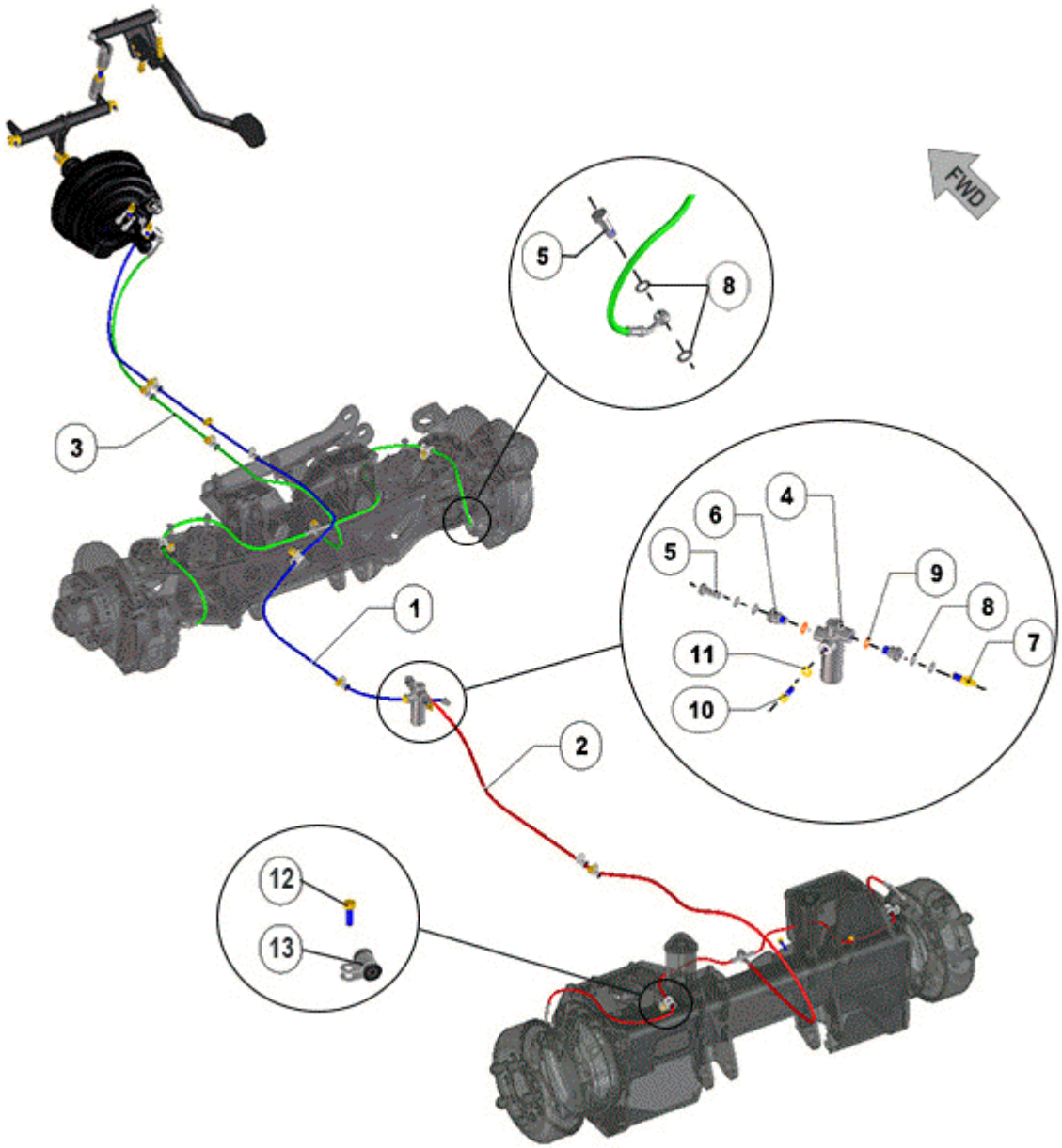

FIGURE	RÉFÉRENCE	NOM	QUANTITÉ
001	48.05135.00	REAR BRAKE HOSE	1
002	48.05134.00	REAR BRAKE HOSE	1
003	48.05132.00	BRAKE TUBE SET	1
003	48.05103.01	RELIEF VALVE BRAKE	1
005	46.01065.01	FITTING SCREW SIMPLE M10x1	3
006	46.51211.00	ELBOW M / F	2
007	48.05119.00	ROD REC.10 M10XD8X80	1
008	106.10000.20	WASHER CU 10x16x1,5 DIN7603A	12
009	106.12000.20	WASHER CU	2
010	603.08025.87	SCREW DIN933 M8x25	1
011	101.08000.67	WASHER DIN125 D8	1

012	603.06020.87	SCREW DIN933 M6x20	8
013	48.05131.00	REAR BRAKE PIPE SET	12

OPERATION BRAKE

FOOTBRAKE (PART 3)

CHÂSSIS: 70240

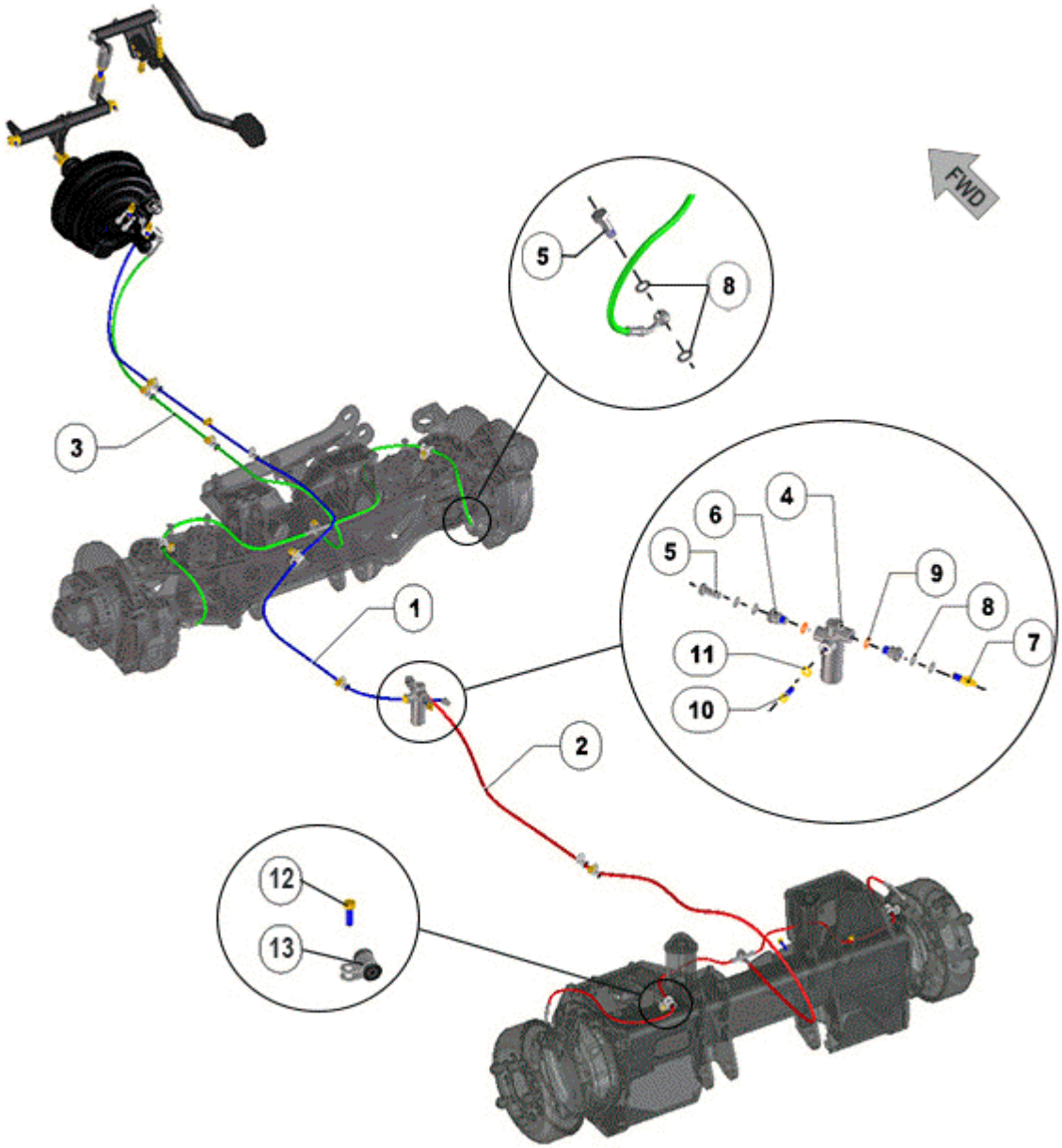

FIGURE	RÉFÉRENCE	NOM	QUANTITÉ
001	48.05135.00	REAR BRAKE HOSE	1
002	48.05134.00	REAR BRAKE HOSE	1
003	48.05132.00	BRAKE TUBE SET	1
004	48.05191.00	RELIEF VALVE BRAKE	1
005	46.01065.01	FITTING SCREW SIMPLE M10x1	3
006	46.51211.00	ELBOW M / F	2
007	48.05119.00	ROD REC.10 M10XD8X80	1
008	106.10000.20	WASHER CU 10x16x1,5 DIN7603A	12
009	106.12000.20	WASHER CU	2
010	603.08025.87	SCREW DIN933 M8x25	1
011	101.08000.67	WASHER DIN125 D8	1

012	603.06020.87	SCREW DIN933 M6x20	8
013	48.05131.00	REAR BRAKE PIPE SET	12

OPERATION BRAKE

FOOTBRAKE (PART 3)

CHÂSSIS: 71901

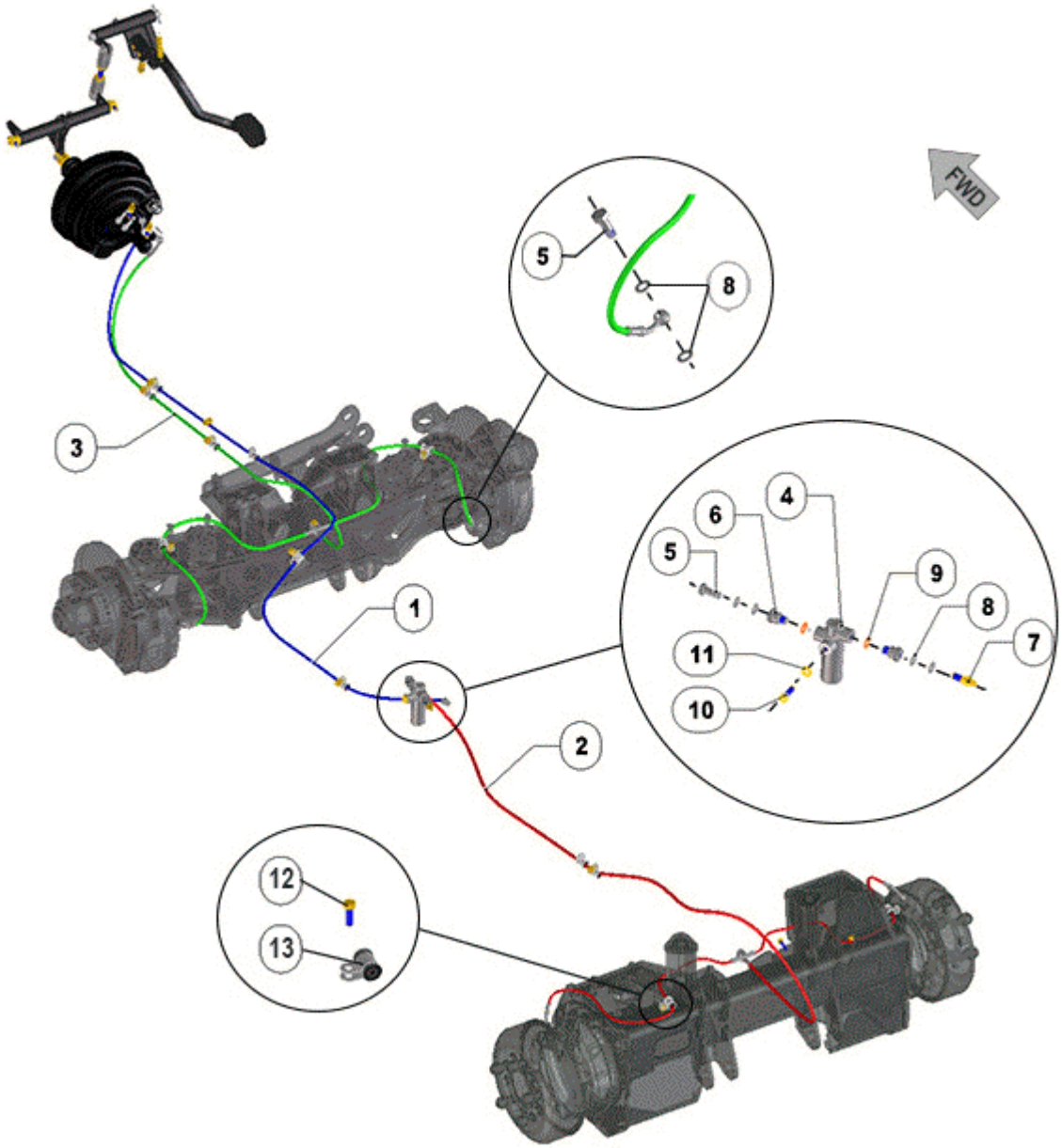

FIGURE	RÉFÉRENCE	NOM	QUANTITÉ
001	48.05135.00	REAR BRAKE HOSE	1
002	48.05134.01	NEW MOTOR REAR BRAKE HOSE	1
003	48.05132.00	BRAKE TUBE SET	1
004	48.05191.00	RELIEF VALVE BRAKE	1
005	46.01065.01	FITTING SCREW SIMPLE M10x1	3
006	46.51211.00	ELBOW M / F	2
007	48.05119.00	ROD REC.10 M10XD8X80	1
008	106.10000.20	WASHER CU 10x16x1,5 DIN7603A	12
009	106.12000.20	WASHER CU	2
010	603.08025.87	SCREW DIN933 M8x25	1
011	101.08000.67	WASHER DIN125 D8	1

012	603.06020.87	SCREW DIN933 M6x20	8
013	48.05131.00	REAR BRAKE PIPE SET	12

OPERATION BRAKE

HANDBRAKE (PART 1)

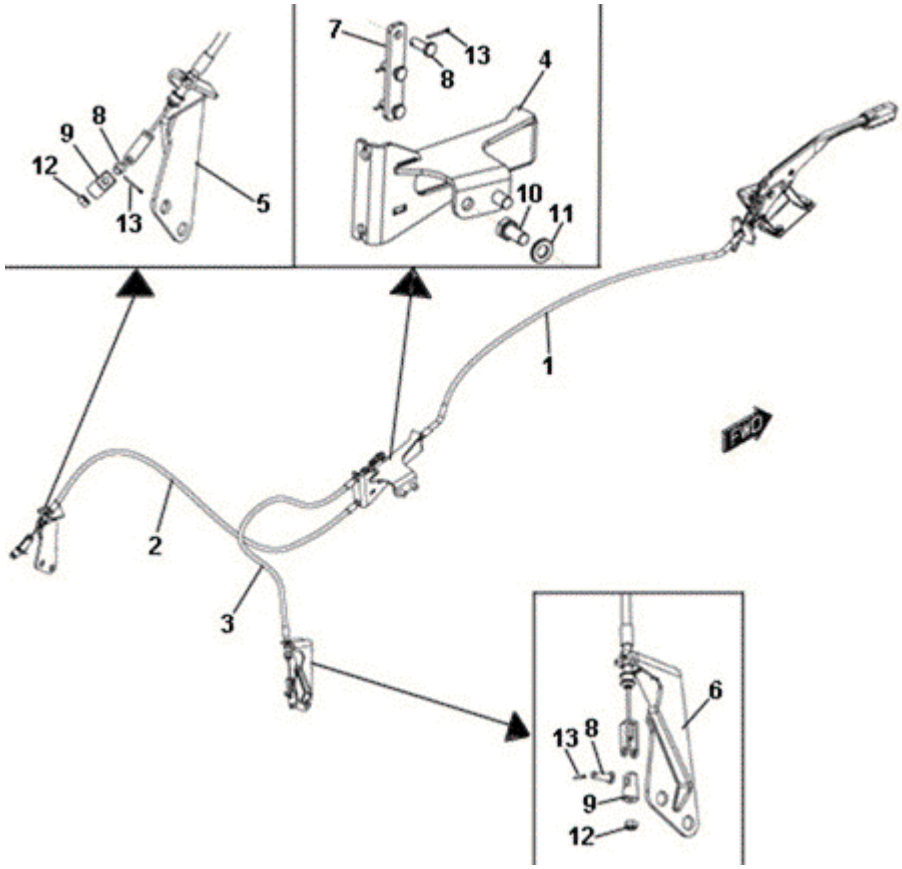

FIGURE	RÉFÉRENCE	NOM	QUANTITÉ
001	48.05222.00	BRAKE CABLE D3.5X1047	1
002	48.05221.00	BRAKE CABLE D3.5X990	1
003	48.05220.00	BRAKE CABLE D3.5X990	1
004	48.05214.00	SOP. HAND BRAKE LOCK	1
005	48.05211.00	SOP. LOCK IZ. FRE. HAND	1
006	48.05210.01	BRAKE MOUNTING BRACKET RIGHT HAND	1
007	48.05216.00	Support 100X20X3	1
008	01.00514.02	AXLE CIL/CPA	5
009	48.05217.00	Support D18X37,5	2
010	603.12025.87	SCREW DIN933 M12x25	2
011	101.12000.67	WASHER DIN 125 D12	2
012	701.08000.67	NUT DIN934 M8x1,25	2
013	401.02025.60	PIN DIN94 2x25	5

OPERATION BRAKE

HANDBRAKE (PART 1)

CHÂSSIS: 69945

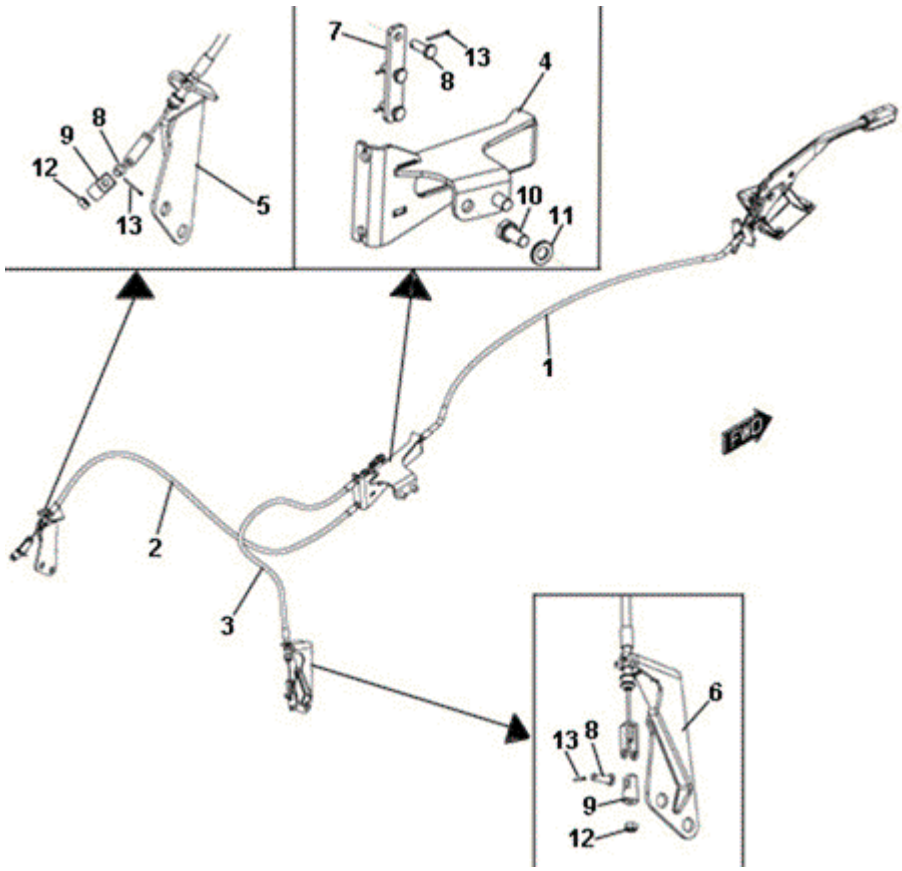

FIGURE	RÉFÉRENCE	NOM	QUANTITÉ

OPERATION BRAKE

HANDBRAKE (PART 1)

CHÂSSIS: 71901

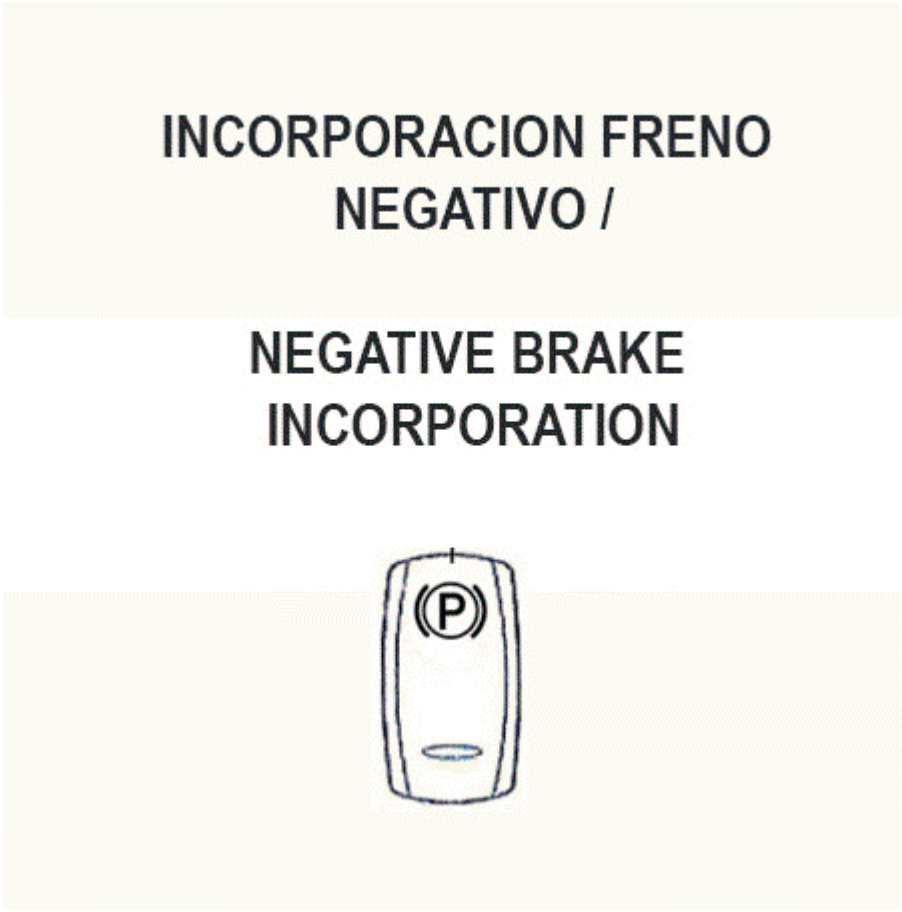

FIGURE	RÉFÉRENCE	NOM	QUANTITÉ

OPERATION BRAKE
HANDBRAKE (PART 2)

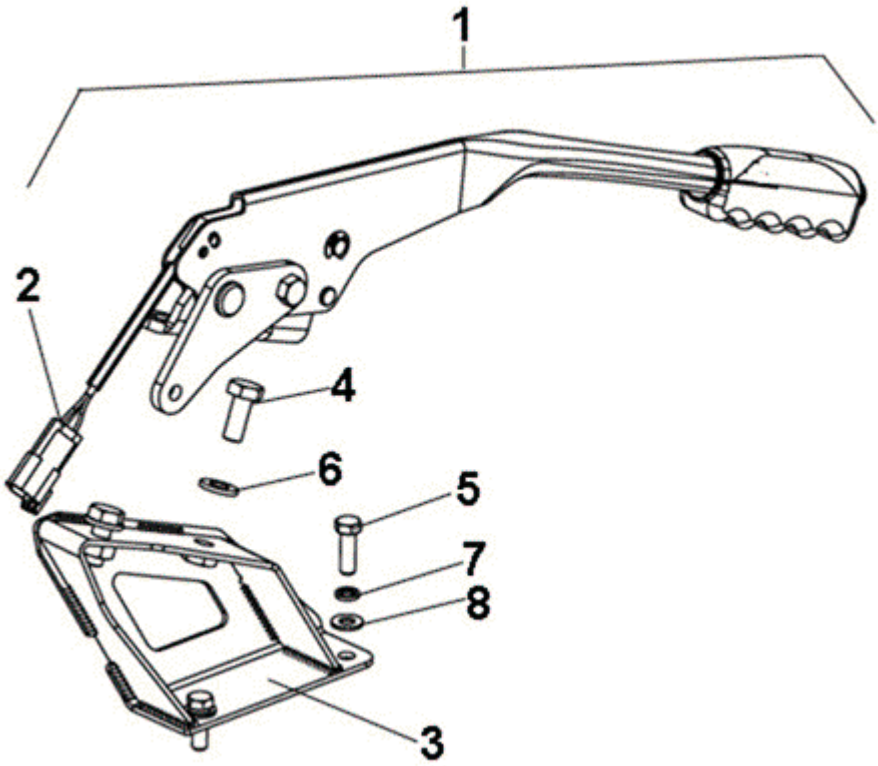

FIGURE	RÉFÉRENCE	NOM	QUANTITÉ
001	48.05250.00	ACC LEVER. BRAKE	1
002	48.05251.00	BRAKE LEVER SENSOR	1
003	48.05218.01	BRAKE LEVER MOUNTING BRACKET	1
004	603.10025.87	SCREW DIN933 M10x25	2
005	603.08025.87	SCREW DIN933 M8x25	2
006	101.10000.67	D10 WASHER DIN125	2
007	104.08000.00	WASHER DIN7980 D8	2
008	101.08000.67	WASHER DIN125 D8	2

OPERATION BRAKE

HANDBRAKE (PART 2)

CHÂSSIS: 71901

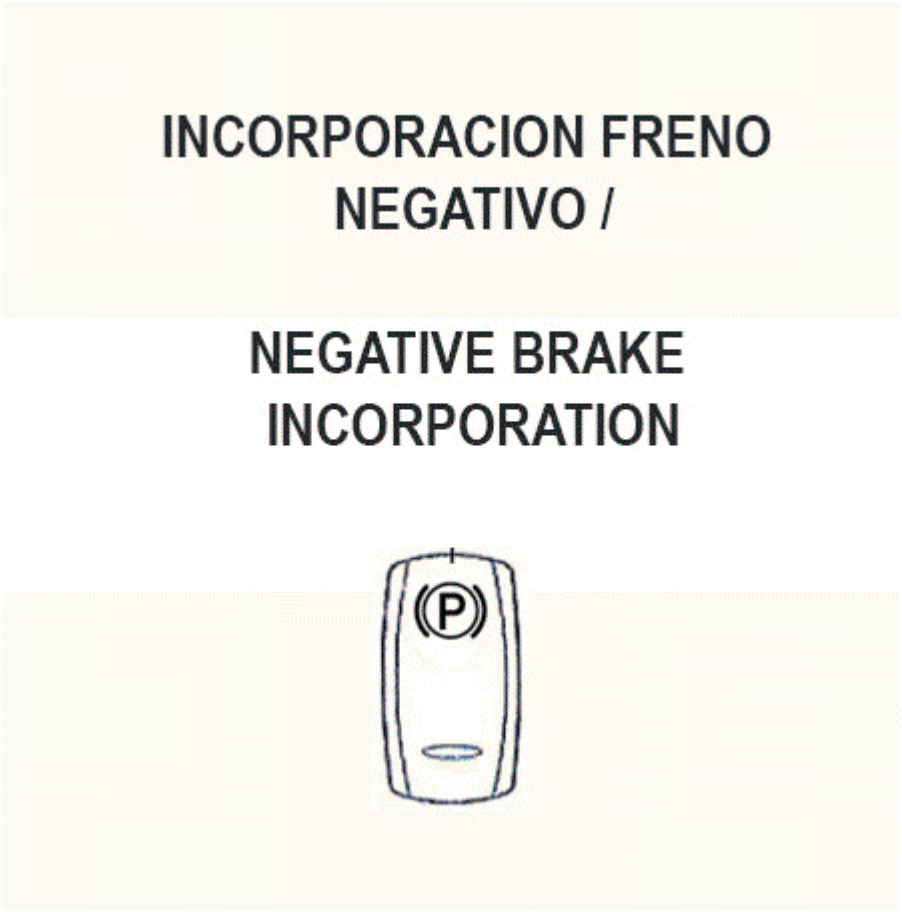

FIGURE	RÉFÉRENCE	NOM	QUANTITÉ

06. DIRECTION

STEERING (PART 1)

CHÂSSIS: 71018

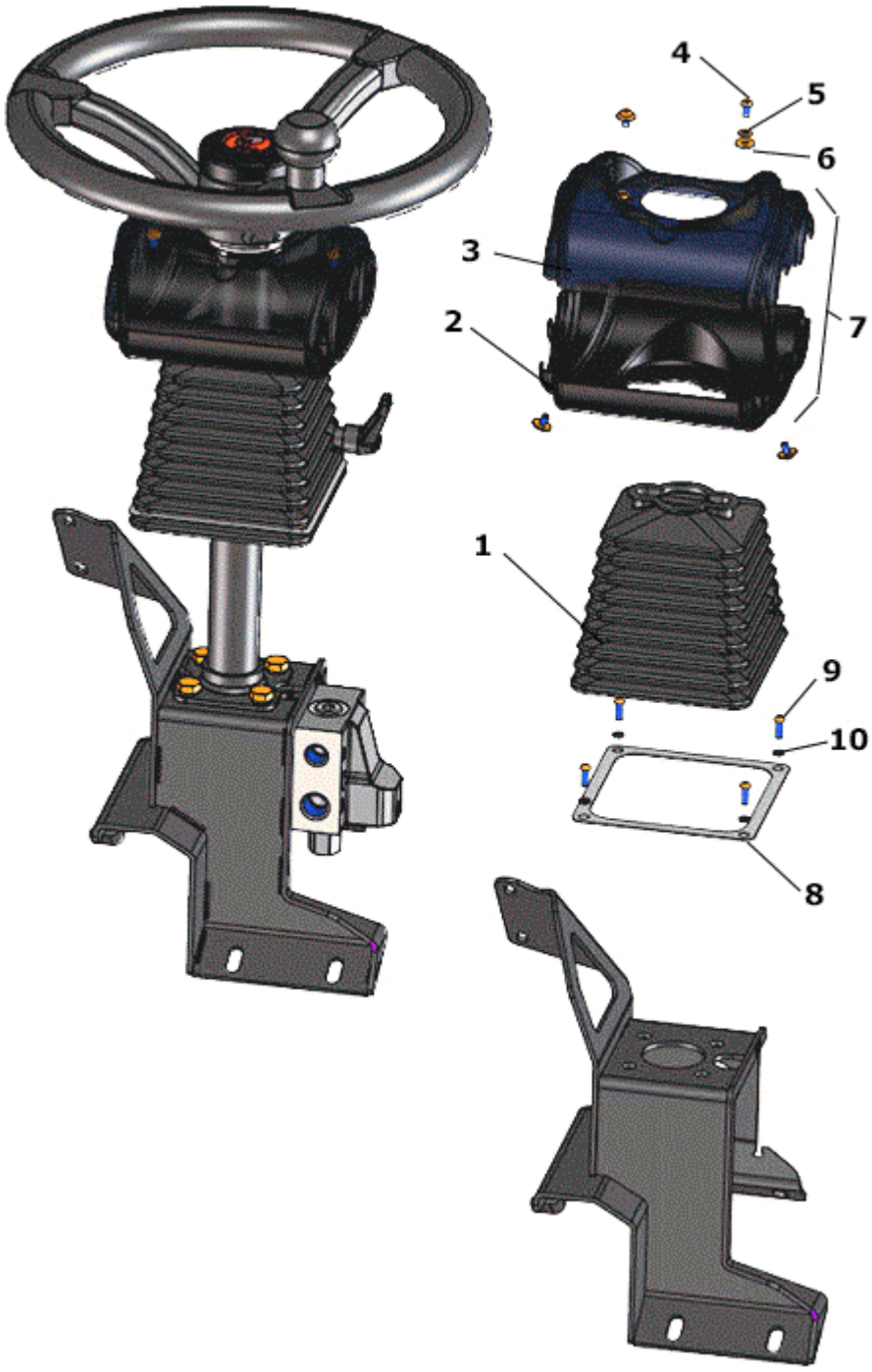

FIGURE	RÉFÉRENCE	NOM	QUANTITÉ
001	48.06212.00	RUBBER PROTECTOR	1
002	48.08321.00	FLYWHEEL HOUSING INF.	1
003	48.08320.00	FLYWHEEL HOUSING SUP.	1
004	630.05010.97	SCREW. M5x10 ISO7380	6
005	101.05000.67	WASHER DIN125 D5	4
006	112.05000.67	WASHER D5	4

007	48.08322.00	FLYWHEEL HOUSING KIT	1
008	48.07333.00	REINFORCEMENT 143X143X1.5	1
009	630.05015.97	ISO 7380 SCREW M5x15	4
010	104.05000.00	WASHER DIN7980 D5	4

06. DIRECTION

STEERING (PART 2)

CHÂSSIS: 71018

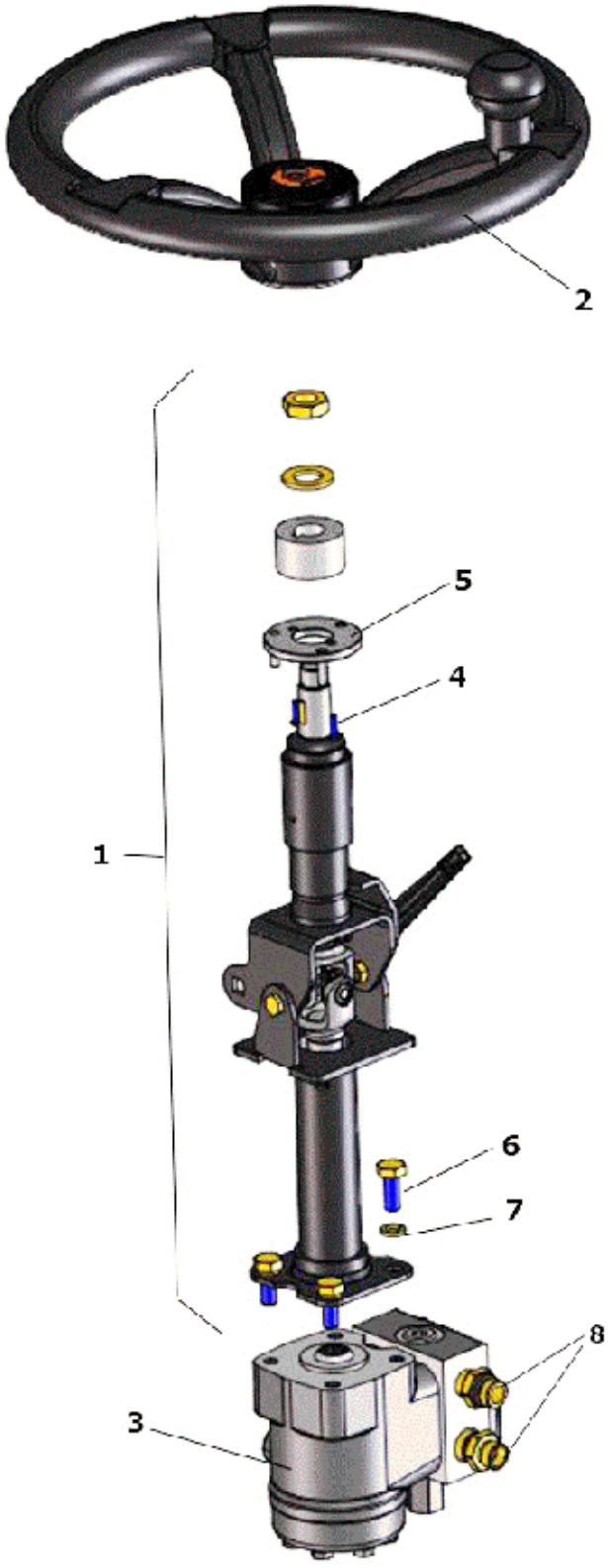

FIGURE	RÉFÉRENCE	NOM	QUANTITÉ
001	48.06210.00	STEERING COLUMN. ADJUSTABLE	1
002	46.06356.02	STEERING WHEEL WITH KNOB	1
003	48.06260.02	HYDROSTATIC STEERING 50CC	1

003B	32.10403.00	PRIORITY VALVE	1
004	48.06209.00	PLATE RET. INT. D64XD26X18	1
005	630.04015.97	SCREW M4x15 ISO7380	2
006	603.10025.87	SCREW DIN933 M10x25	4
007	104.10000.00	WASHER DIN7980 D10	4
008	48.10835.01	NIPPLE M/M MB3/4 SAE-MM M18X1.5	2

COMMENTAIRES

AÑADIR MUELLES DE 4BAR EN VALVULA DE PRIORIDAD Y CHICLE 0,6 MM EN ORBITROL

08. BODYWORK

PANEL (RIGHT DRIVING)

CHÂSSIS: 72014

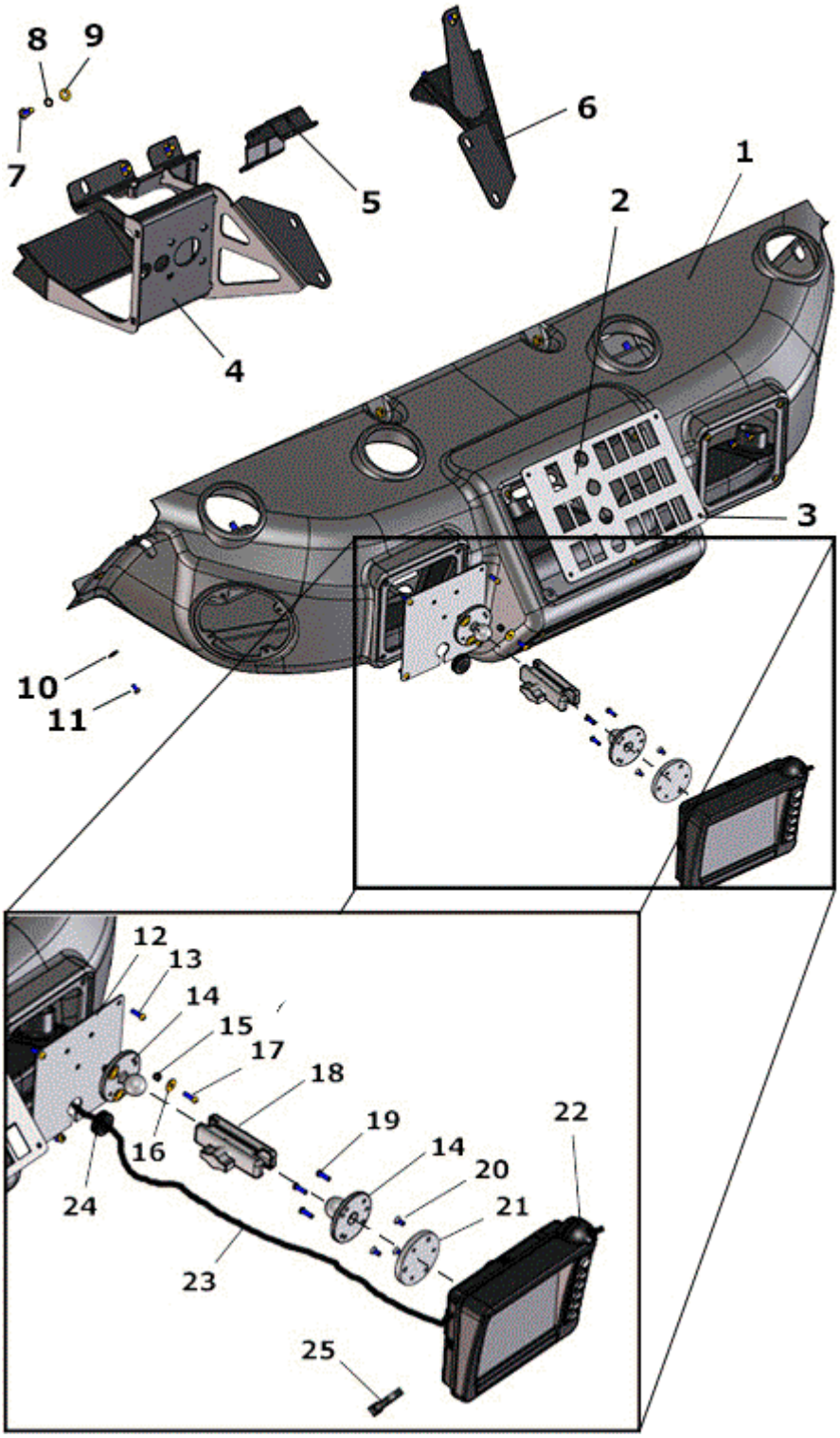

FIGURE	RÉFÉRENCE	NOM	QUANTITÉ
001	48.08315.00	RIGHT TABLIER	1
002	48.08105.01	CENTRAL PLATE 250X172X2	1
003	630.05010.97	SCREW. M5x10 ISO7380	4
004	48.08261.01	SUPPORT RIGHT DIRECTION	1

005	48.08268.00	MOUNTING BRACKET RIGHT FOOTSWITCH	1
006	48.08263.00	RIGHT HEATING SUPPORT	1
007	603.08020.87	SCREW DIN933 M8x20	4
008	104.08000.00	WASHER DIN7980 D8	4
009	101.08000.67	WASHER DIN125 D8	4
010	112.05000.67	WASHER D5	8
011	630.05010.97	SCREW. M5x10 ISO7380	8
012	48.08508.00	FIXING SUPPORT DISPLAY	1
013	630.05015.97	ISO 7380 SCREW M5x15	4
014	48.08510.00	BALL FIXING DISPLAY SUPPORT	2
015	711.05000.66	NUT DIN982 M5	3
016	112.05000.67	WASHER D5	3
017	630.05015.97	ISO 7380 SCREW M5x15	3
018	48.08509.00	BALL DISPLAY SUPPORT ARTICULATED	1
019	630.05015.97	ISO 7380 SCREW M5x15	3
020	618.05015.87	SCREW M5x15 DIN7991	3
021	48.08507.00	FIXING SUPPORT DISPLAY	1
022	48.11031.00	MULTIFUNCTION DISPLAY STD.	1
023	48.11089.00	SECTION I / E EXTENSION DISPLAY	1
024	43.07777.00	GROMMET	1
025	931.05370.00	CLAMP TAPE 5x370	1

08. BODYWORK

PANEL (RIGHT DRIVING)

CHÂSSIS: 73016

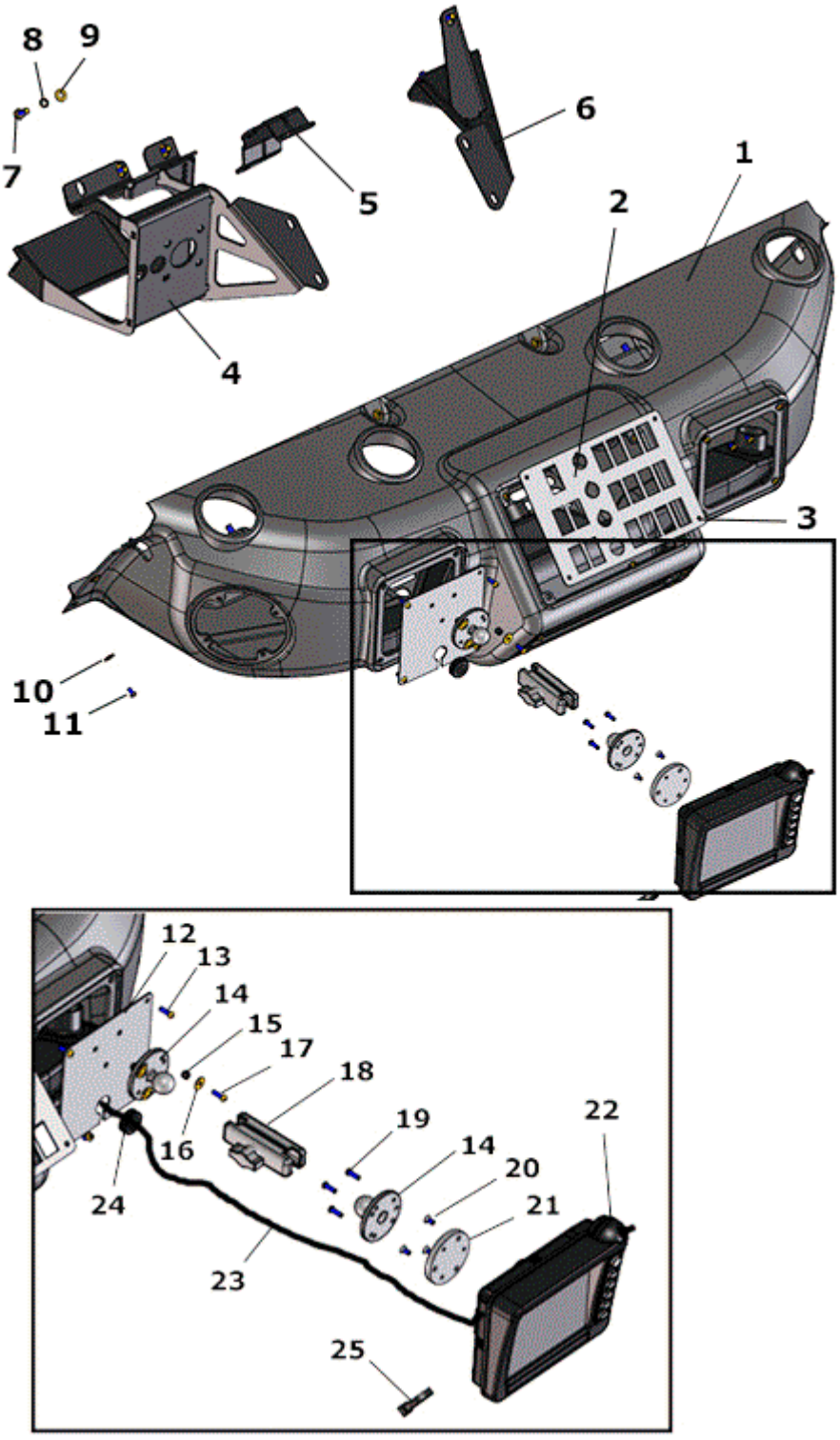

FIGURE	RÉFÉRENCE	NOM	QUANTITÉ
001	48.08315.00	RIGHT TABLIER	1
002	48.08105.01	CENTRAL PLATE 250X172X2	1
003	630.05010.97	SCREW. M5x10 ISO7380	4
004	48.08261.00	RIGHT SUPPORT	1

005	48.08268.00	MOUNTING BRACKET RIGHT FOOTSWITCH	1
006	48.08263.00	RIGHT HEATING SUPPORT	1
007	603.08020.87	SCREW DIN933 M8x20	4
008	104.08000.00	WASHER DIN7980 D8	4
009	101.08000.67	WASHER DIN125 D8	4
010	112.05000.67	WASHER D5	8
011	630.05010.97	SCREW. M5x10 ISO7380	8
012	48.08508.00	FIXING SUPPORT DISPLAY	1
013	630.05015.97	ISO 7380 SCREW M5x15	4
014	48.08510.00	BALL FIXING DISPLAY SUPPORT	2
015	711.05000.66	NUT DIN982 M5	3
016	112.05000.67	WASHER D5	3
017	630.05015.97	ISO 7380 SCREW M5x15	3
018	48.08509.00	BALL DISPLAY SUPPORT ARTICULATED	1
019	630.05015.97	ISO 7380 SCREW M5x15	3
020	618.05015.87	SCREW M5x15 DIN7991	3
021	48.08507.00	FIXING SUPPORT DISPLAY	1
022	48.11031.00	MULTIFUNCTION DISPLAY STD.	1
023	48.11089.00	SECTION I / E EXTENSION DISPLAY	1
024	43.07777.00	GROMMET	1
025	931.05370.00	CLAMP TAPE 5x370	1

08. BODYWORK

TABLIER DRIVING LEFT

CHÂSSIS: 73016

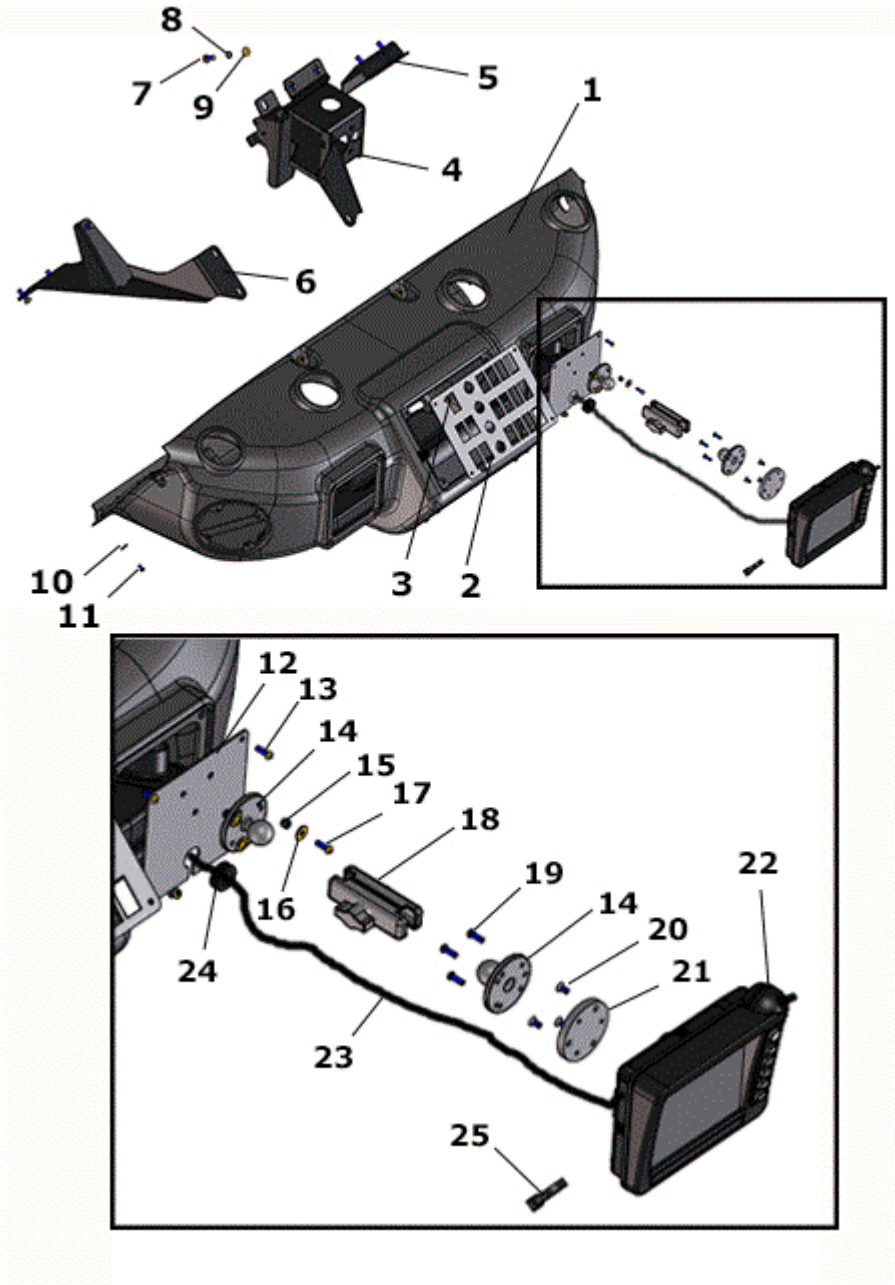

FIGURE	RÉFÉRENCE	NOM	QUANTITÉ
001	48.08316.00	TABLIER COND. LEFT.	1
002	48.08105.01	CENTRAL PLATE 250X172X2	1
003	630.05010.97	SCREW. M5x10 ISO7380	4
004	48.08265.00	FIXING BRACKET LEFT DRIVING TABLIER	1
005	48.08266.00	SOP. FIJACION PEDAL ACC.	1
006	48.08264.00	SOP. HEATING FIXING. COND. IZ	1
007	603.08020.87	SCREW DIN933 M8x20	4
008	104.08000.00	WASHER DIN7980 D8	4
009	101.08000.67	WASHER DIN125 D8	4

010	112.05000.67	WASHER D5	8
011	630.05010.97	SCREW. M5x10 ISO7380	8
012	48.08508.00	FIXING SUPPORT DISPLAY	1
013	630.05015.97	ISO 7380 SCREW M5x15	4
014	48.08510.00	BALL FIXING DISPLAY SUPPORT	2
015	711.05000.66	NUT DIN982 M5	3
016	112.05000.67	WASHER D5	3
017	630.05015.97	ISO 7380 SCREW M5x15	3
018	48.08509.00	BALL DISPLAY SUPPORT ARTICULATED	1
019	630.05015.97	ISO 7380 SCREW M5x15	3
020	618.05015.87	SCREW M5x15 DIN7991	3
021	48.08507.00	FIXING SUPPORT DISPLAY	1
022	48.11031.00	MULTIFUNCTION DISPLAY STD.	1
023	48.11089.00	SECTION I / E EXTENSION DISPLAY	1
024	43.07777.00	GROMMET	1
025	931.05370.00	CLAMP TAPE 5x370	1

08. BODYWORK

CAR BODY

BASTIDOR: 71859

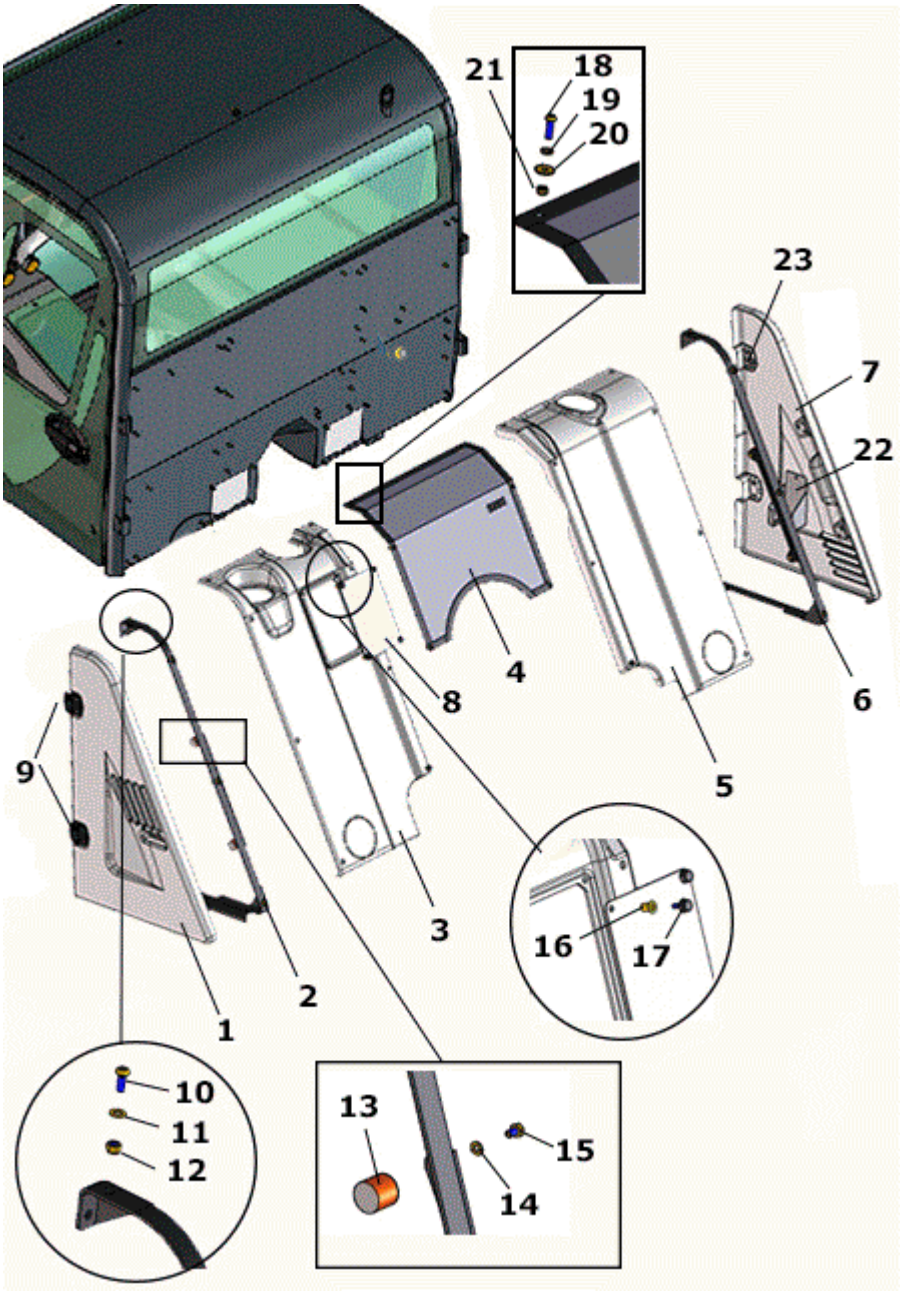

FIGURA	REFERENCIA	DENOMINACIÓN	CANTIDAD
001	48.08403.01	LEFT REAR DOOR CABINET	1
002	48.08407.01	COVERING LEFT REAR CABIN	1
003	48.08410.00	LEFT REAR COVER	1
004	48.13217.01	RADIATOR PROTECTOR / A	1
005	48.08411.00	CASE REAR RIGHT	1
006	48.08406.01	COVERING RIGHT REAR CABIN	1
007	48.08402.00	GATE POST. CABIN DER.	1
008	48.08409.00	BATTERY ACCESS PLATE	1
009	48.08405.00	CHECK HINGE 150 °	4

010	630.08020.97		8
011	101.08000.67	WASHER DIN125 D8	8
012	711.08000.67	NUT DIN982 M8	8
013	39.08036.00	MAGNET	4
014	104.06000.00	WASHER DIN7980 D6	4
015	603.06010.86	SCREW DIN933 M6x10	4
016	48.08339.00	RADIATOR TOP COVER	7
017	46.00810.00	KNOB	4
018	630.06020.96	SCREW ISO7380 M6x20	2
019	104.06000.00	WASHER DIN7980 D6	12
020	112.06000.67	CIR-CLIP DIN9021 D6	2
021	711.06000.66	NUT DIN982 M6	2
022	48.08501.00	SUPPORT	1
023	48.09905.00	SUPPORT	1

08. BODYWORK
SHEETS (1)

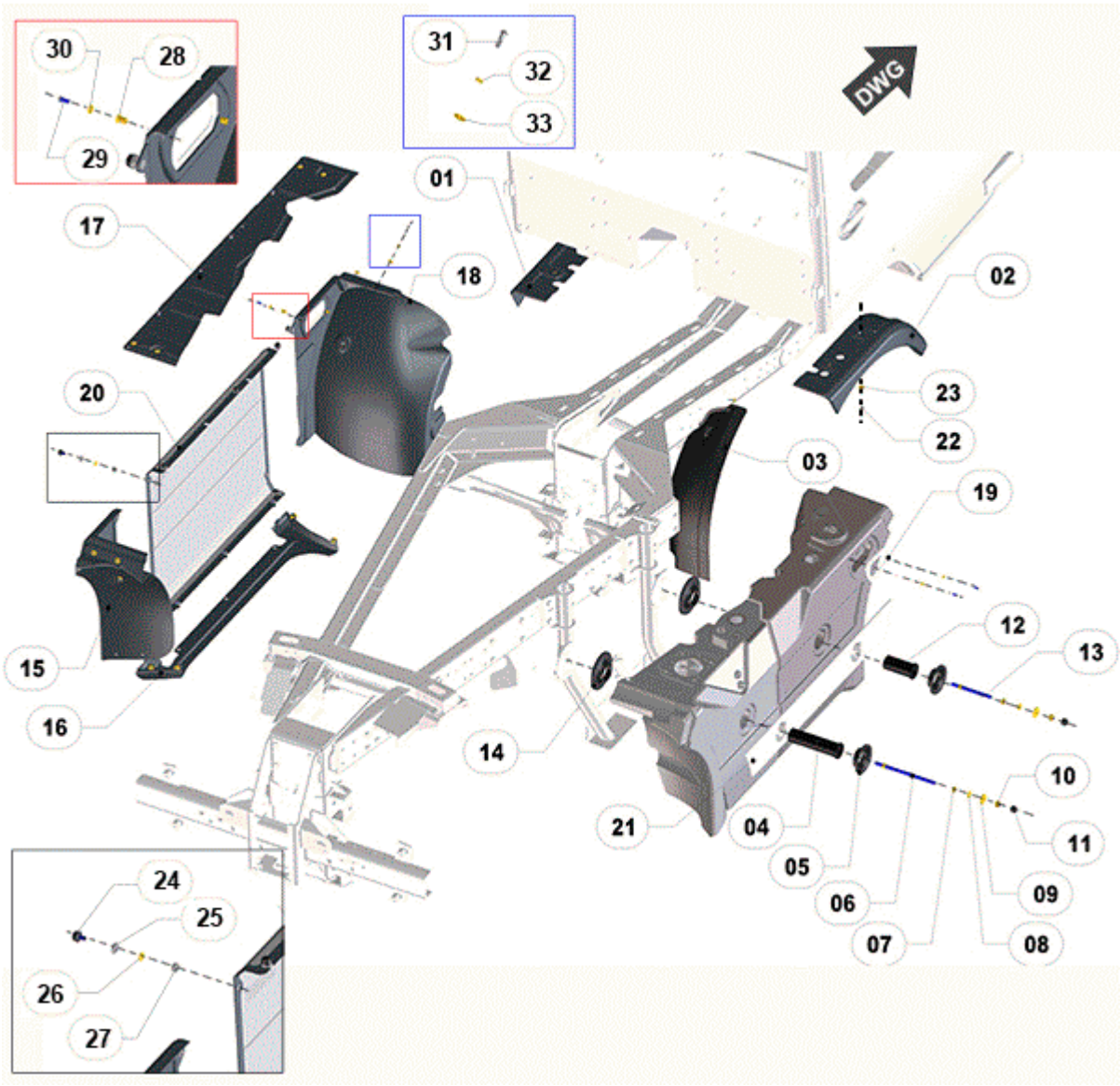

FIGURA	REFERENCIA	DENOMINACIÓN	CANTIDAD
001	48.08312.00	LEFT WHEEL COVER	1
002	48.08311.00	RIGHT WHEEL COVER	1
003	48.08342.00	WHEEL COVER	1
004	48.08112.00	SUPPORT Ø50X196	1
005	32.08110.01	RUBBER CAP Ø108X36	2
006	48.08114.00	DIPSTICK. M12XM12XD12X248	1
007	702.12000.67	NUT DIN 936 M12x175	2
008	101.12000.67	WASHER DIN 125 D12	2
009	112.12000.67	WASHER DIN9021 D 12X36	2
010	711.12000.66	NUT DIN982 M12	2
011	48.08119.00	PLUG	2
012	48.08111.00	SOP. FIXING Ø50X113.5	1
013	48.08113.00	ROD. M12XM12XD12X165	1

014	32.08110.00	BUSHING, RUBBER Ø140x36	2
015	48.08337.00	RADIATOR COVER POST.	1
016	48.08338.01	COVER LOWER RADIATOR	1
017	48.08339.00	RADIATOR TOP COVER	1
018	48.08341.00	STEP COVER WHEEL INT. I	1
019	48.11102.00	IRON BREAK. 181X100X2	2
020	48.08336.01	PROT. RADIATOR	1
021	48.08110.00	IRON DEP. 1011X130X34	1
022	112.06000.67	CIR-CLIP DIN9021 D6	6
023	711.06000.66	NUT DIN982 M6	6
024	46.00810.00	KNOB	6
025	01.00345.01	WASHER DIN 1441 * D11.5X4XD21	10
026	101.08000.67	WASHER DIN125 D8	10
027	16.01155.00	GROMMET D11XD15XD19X4X8	10
029	630.06015.97	SCREW M6x15 ISO7380	4
030	101.06000.67	WASHER DIN125 D6	4
031	630.06025.96	SCREW ISO7380 M6x25	13
032	104.06000.00	WASHER DIN7980 D6	13
033	112.06000.66	WASHER DIN9021 D6	13

08. BODYWORK

SHEETS (1)

BASTIDOR: 71019

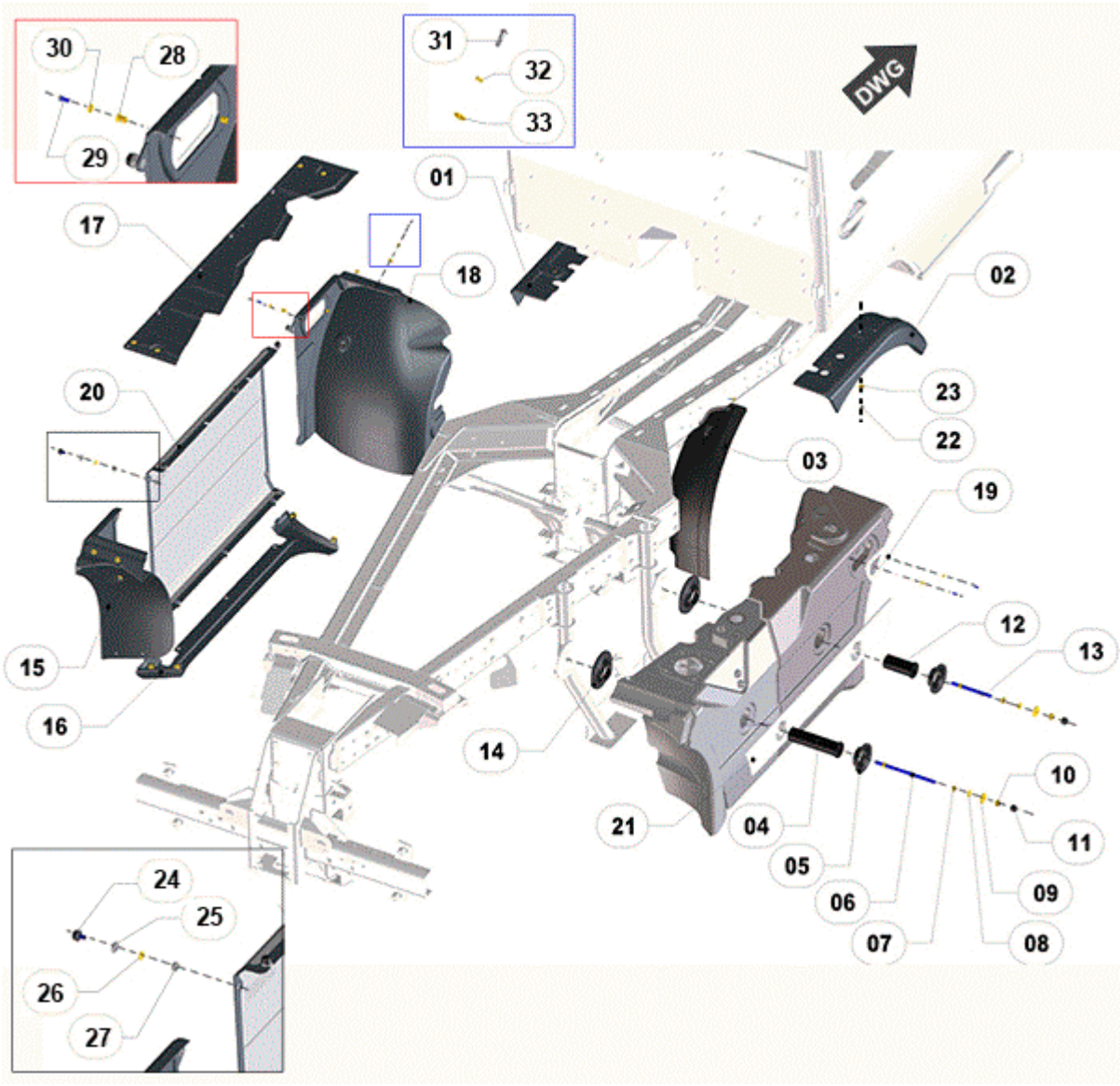

FIGURA	REFERENCIA	DENOMINACIÓN	CANTIDAD
001	48.08312.00	LEFT WHEEL COVER	1
002	48.08311.00	RIGHT WHEEL COVER	1
003	48.08342.00	WHEEL COVER	1
004	48.08112.00	SUPPORT Ø50X196	1
005	32.08110.01	RUBBER CAP Ø108X36	2
006	48.08114.00	DIPSTICK. M12XM12XD12X248	1
007	702.12000.67	NUT DIN 936 M12x175	2
008	101.12000.67	WASHER DIN 125 D12	2
009	112.12000.67	WASHER DIN9021 D 12X36	2
010	711.12000.66	NUT DIN982 M12	2
011	48.08119.00	PLUG	2
012	48.08111.00	SOP. FIXING Ø50X113.5	1

013	48.08113.00	ROD. M12XM12XD12X165	1
014	32.08110.00	BUSHING, RUBBER Ø140x36	2
015	48.08337.00	RADIATOR COVER POST.	1
016	48.08338.01	COVER LOWER RADIATOR	1
017	48.08339.00	RADIATOR TOP COVER	1
018	48.08341.00	STEP COVER WHEEL INT. I	1
019	48.11102.00	IRON BREAK. 181X100X2	2
020	48.08336.01	PROT. RADIATOR	1
021	48.08110.00	IRON DEP. 1011X130X34	1
022	112.06000.67	CIR-CLIP DIN9021 D6	6
023	711.06000.66	NUT DIN982 M6	6
024	46.00810.01	DOOR KNOB AISI	6
025	01.00345.01	WASHER DIN 1441 * D11.5X4XD21	10
026	101.08000.67	WASHER DIN125 D8	10
027	16.01155.00	GROMMET D11XD15XD19X4X8	10
029	630.06015.97	SCREW M6x15 ISO7380	4
030	101.06000.67	WASHER DIN125 D6	4
031	630.06025.96	SCREW ISO7380 M6x25	13
032	104.06000.00	WASHER DIN7980 D6	13
033	112.06000.66	WASHER DIN9021 D6	13

OBSERVACIONES

MOD.5522

08. BODYWORK

SHEETS (1)

BASTIDOR: 73977

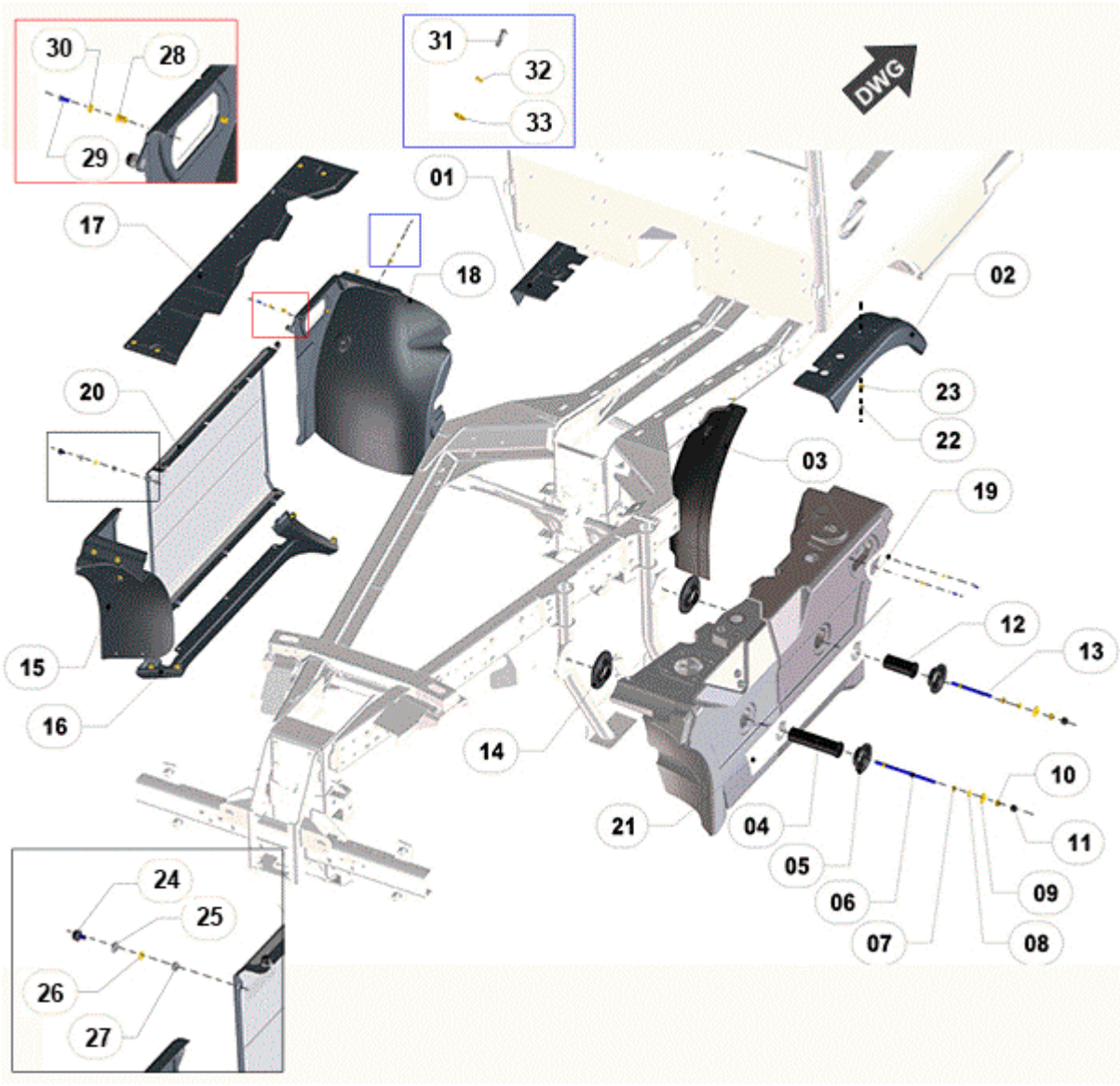

FIGURA	REFERENCIA	DENOMINACIÓN	CANTIDAD
001	48.08312.00	LEFT WHEEL COVER	1
002	48.08311.00	RIGHT WHEEL COVER	1
003	48.08342.00	WHEEL COVER	1
004	48.08112.00	SUPPORT Ø50X196	1
005	32.08110.01	RUBBER CAP Ø108X36	2
006	48.08114.00	DIPSTICK. M12XM12XD12X248	1
007	702.12000.67	NUT DIN 936 M12x175	2
008	101.12000.67	WASHER DIN 125 D12	2
009	112.12000.67	WASHER DIN9021 D 12X36	2
010	711.12000.66	NUT DIN982 M12	2
011	48.08119.00	PLUG	2
012	48.08111.00	SOP. FIXING Ø50X113.5	1

013	48.08113.00	ROD. M12XM12XD12X165	1
014	32.08110.00	BUSHING, RUBBER Ø140x36	2
015	48.08337.02	BACK COVER RADIATOR	1
016	48.08338.01	COVER LOWER RADIATOR	1
017	48.08339.02	COVER SUPERIOR RADIATOR	1
018	48.08341.01	COVER FRONT RADIATOR	1
019	48.11102.00	IRON BREAK. 181X100X2	2
020	48.08336.02	RADIATOR PROTECTION	1
021	48.08110.00	IRON DEP. 1011X130X34	1
022	112.06000.67	CIR-CLIP DIN9021 D6	6
023	711.06000.66	NUT DIN982 M6	6
024	966.08015.86	KNOB	10
025	01.00345.01	WASHER DIN 1441 * D11.5X4XD21	10
026	101.08000.67	WASHER DIN125 D8	10
027	16.01155.00	GROMMET D11XD15XD19X4X8	10
029	630.06015.97	SCREW M6x15 ISO7380	4
030	101.06000.67	WASHER DIN125 D6	4
031	630.06025.96	SCREW ISO7380 M6x25	13
032	104.06000.00	WASHER DIN7980 D6	13
033	112.06000.66	WASHER DIN9021 D6	13

OBSERVACIONES

MOD.5580

08. BODYWORK
SHEETS (2)

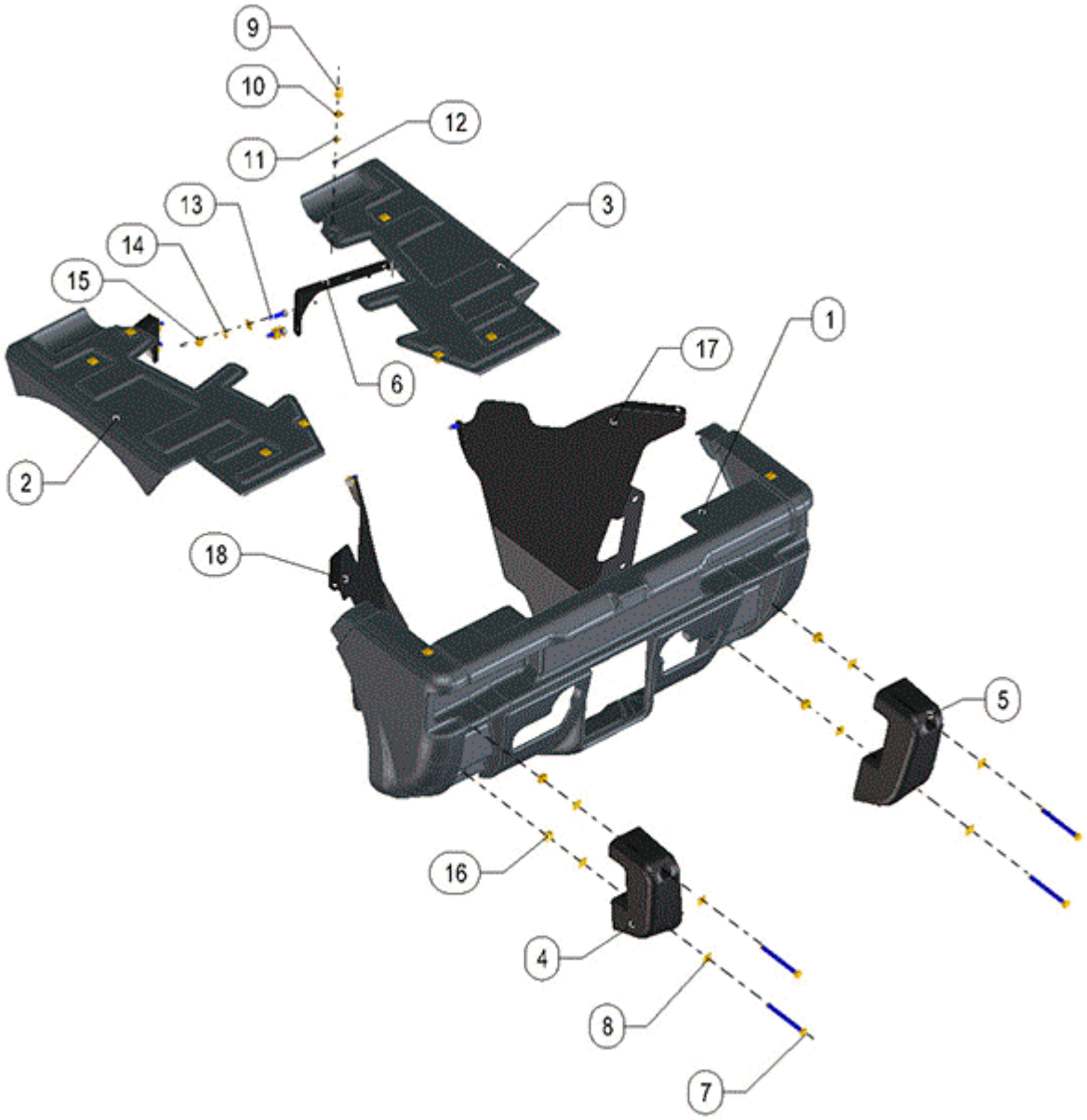

FIGURA	REFERENCIA	DENOMINACIÓN	CANTIDAD
001	48.08333.01	COVER POST. BMW200H	1
002	48.08335.00	AFTER SIDE. IZ. 845X472X130	1
003	48.08331.00	LATERAL TRA. DER. 845X472X130	1
004	48.08334.00	STOP. RUBBER LEFT. INF.	1
005	48.08332.00	STOP. RUBBER DER. INF.	1
006	48.08102.00	SOP. ANG. 265X175X32	4
007	603.12140.87	SCREW DIN933 M12X140	4
008	101.12000.67	WASHER DIN 125 D12	4
009	630.08025.97	SCREW. M8x25 ISO7380	8
010	112.08000.67	WASHER DIN9021	8
011	101.08000.67	WASHER DIN125 D8	8
012	711.08000.66	NUT DIN982 M8	8

013	603.12045.87	SCREW M12x45	8
014	101.12000.67	WASHER DIN 125 D12	16
015	711.12000.66	NUT DIN982 M12	8
016	711.12000.87	NUT DIN982 M12 C8	4
017	48.08151.00	RIGHT REAR PLATE	1
018	48.08150.00	LEFT REAR PLATE	1

08. BODYWORK

SHEETS (2)

BASTIDOR: 73019

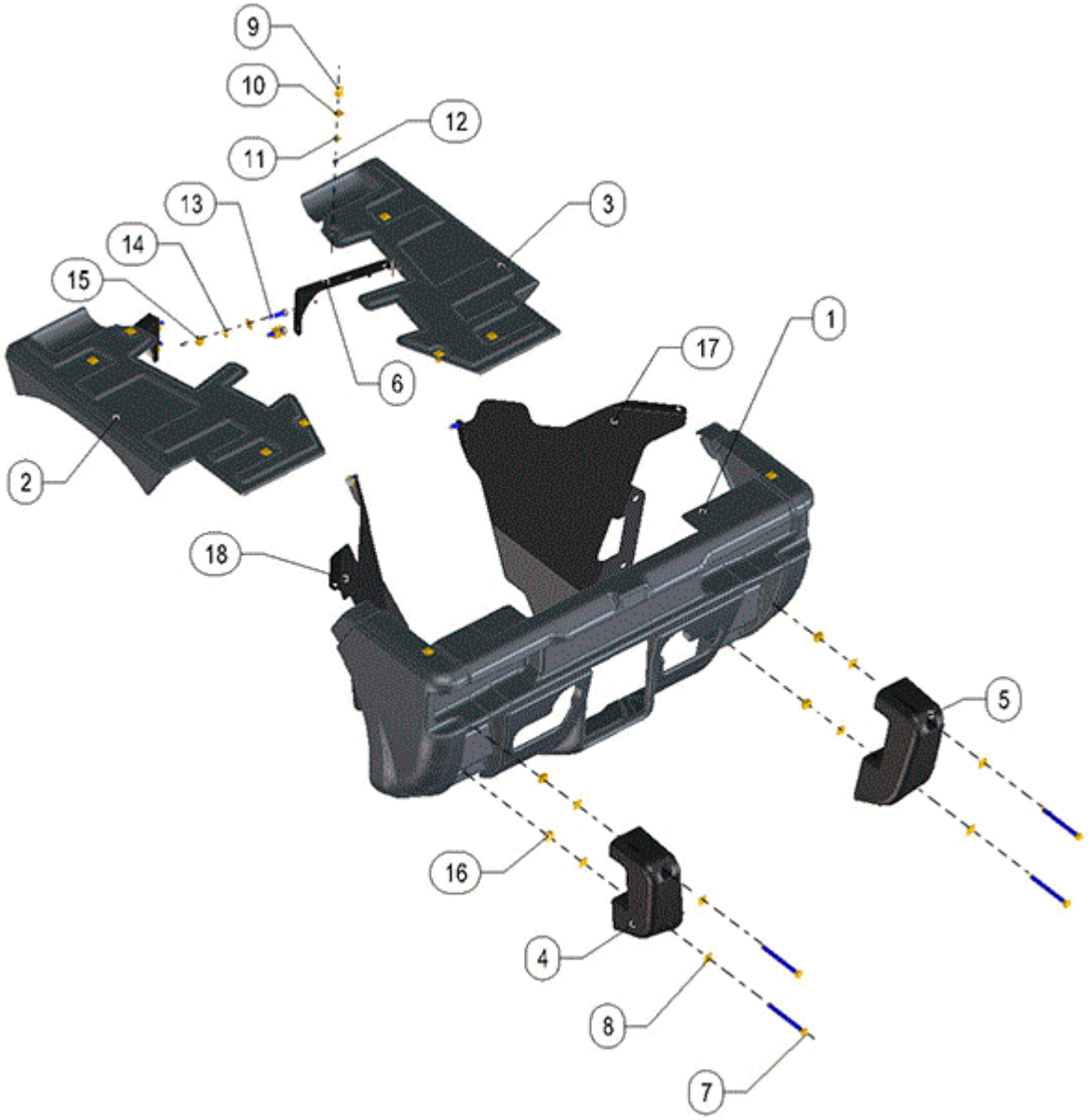

FIGURA	REFERENCIA	DENOMINACIÓN	CANTIDAD
001	48.08333.01	COVER POST. BMW200H	1
002	48.08335.01	REAR LEFT SIDE 845X472X130	1
003	48.08331.01	RIGHT SIDE REAR PLATE	1
004	48.08334.00	STOP. RUBBER LEFT. INF.	1
005	48.08332.00	STOP. RUBBER DER. INF.	1
006	48.08102.00	SOP. ANG. 265X175X32	4
007	603.12140.87	SCREW DIN933 M12X140	4
008	101.12000.67	WASHER DIN 125 D12	4
009	630.08025.97	SCREW. M8x25 ISO7380	8
010	112.08000.67	WASHER DIN9021	8
011	101.08000.67	WASHER DIN125 D8	8

012	711.08000.66	NUT DIN982 M8	8
013	603.12045.87	SCREW M12x45	8
014	101.12000.67	WASHER DIN 125 D12	16
015	711.12000.66	NUT DIN982 M12	8
016	711.12000.87	NUT DIN982 M12 C8	4
017	48.08151.00	RIGHT REAR PLATE	1
018	48.08150.00	LEFT REAR PLATE	1

08. BODYWORK

SHEETS (2)

BASTIDOR: 73621

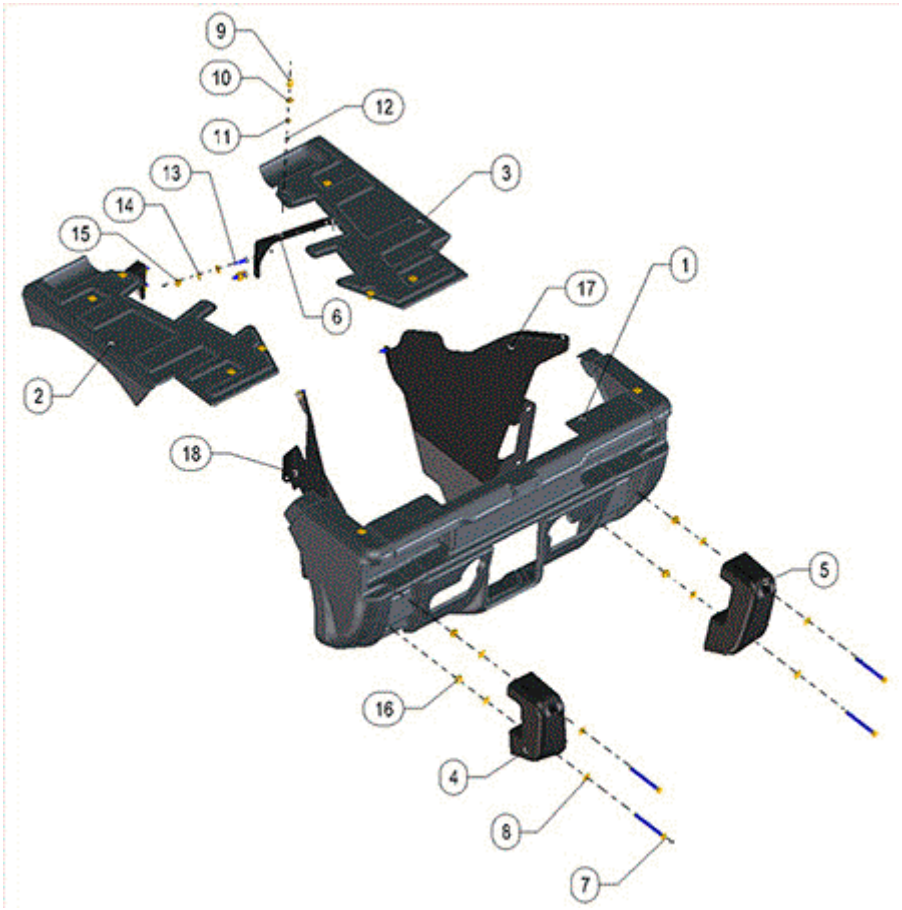

FIGURA	REFERENCIA	DENOMINACIÓN	CANTIDAD
001	48.08333.01	COVER POST. BMW200H	1
002	48.08335.01	REAR LEFT SIDE 845X472X130	1
003	48.08331.01	RIGHT SIDE REAR PLATE	1
004	48.08334.00	STOP. RUBBER LEFT. INF.	1
005	48.08332.00	STOP. RUBBER DER. INF.	1
006	48.08102.01	SUPPORT 265X175X32	2
007	603.12140.87	SCREW DIN933 M12X140	4
008	101.12000.67	WASHER DIN 125 D12	4
009	630.08025.97	SCREW. M8x25 ISO7380	8
010	112.08000.67	WASHER DIN9021	8
011	101.08000.67	WASHER DIN125 D8	8
012	711.08000.66	NUT DIN982 M8	8
013	603.12045.87	SCREW M12x45	8
014	101.12000.67	WASHER DIN 125 D12	16
015	711.12000.66	NUT DIN982 M12	8
016	711.12000.87	NUT DIN982 M12 C8	4
017	48.08151.00	RIGHT REAR PLATE	1
018	48.08150.00	LEFT REAR PLATE	1

10. HYDRAULIC DIAGRAM INSTALLATION

VALVES (PART 1)

BASTIDOR: 71018

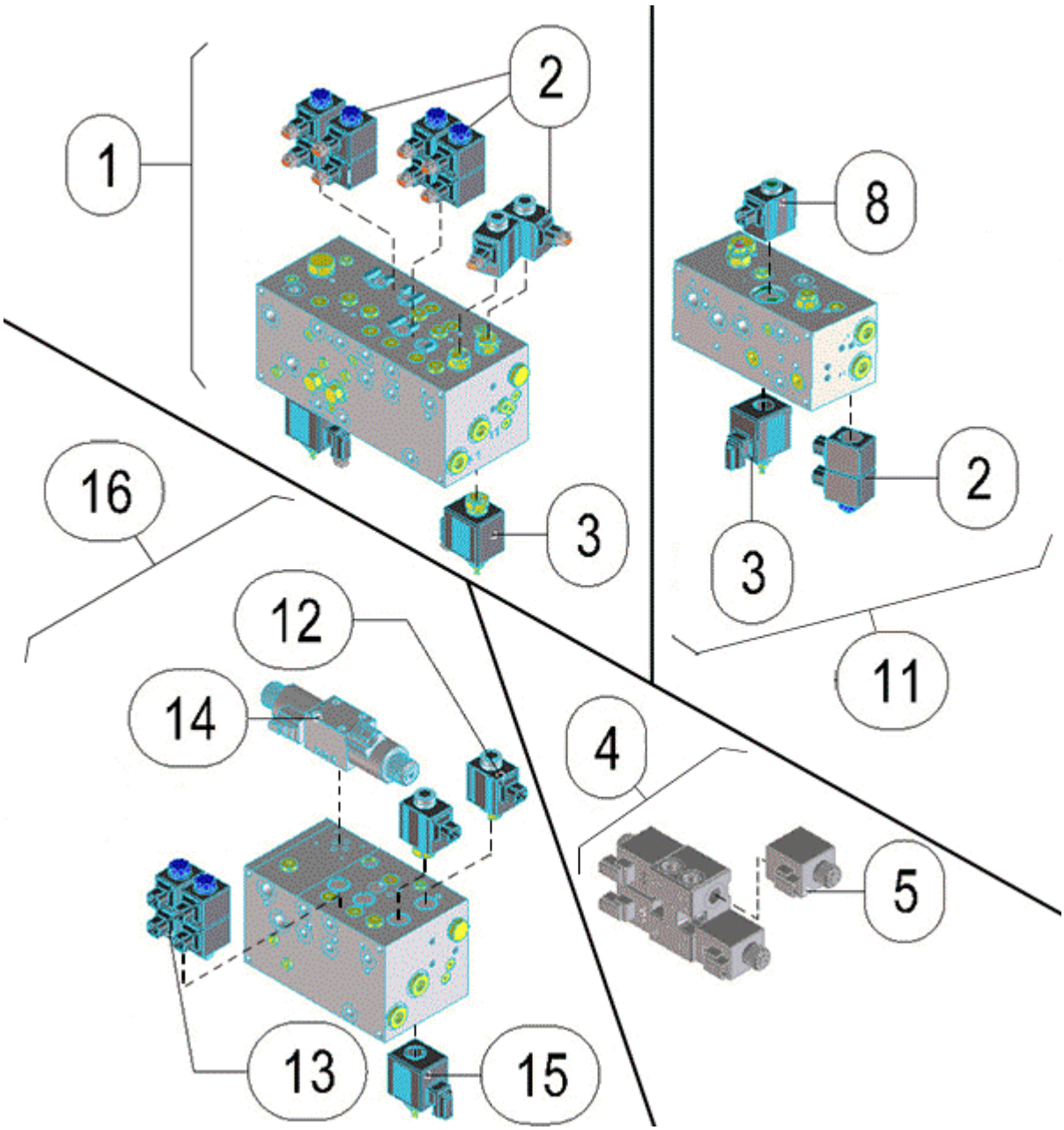

FIGURA	REFERENCIA	DENOMINACIÓN	CANTIDAD
001	48.10420.03	FRONT VALVE BLOCK	1
002	RXOD02172030OB00	SPOOL (12V,20W)	13
003	RXOD0209203POB01	SPOOL (12V,23W)	2
004	48.10450.01	4 WHEELS STEERING VALVE	1
005	RXR933000073	SPOOLE 36W	4
008	RXOD02072030OB02	SPOOL (12V,30W)	1
011	48.10410.00	TURBINE VALVE BLOCK-BOX	1
012	RXOD02072030OB02	SPOOL (12V,30W)	2
013	RXOD02172030OB00	SPOOL (12V,20W)	4
014	RXRR933006826	SPOOL	1

015	RXOD0209203POB01	SPOOL (12V,23W)	1
016	48.10430.00	THIRD VALVE BLOCK BRUSH	1

10. HYDRAULIC DIAGRAM INSTALLATION

VALVES

BASTIDOR: 70040

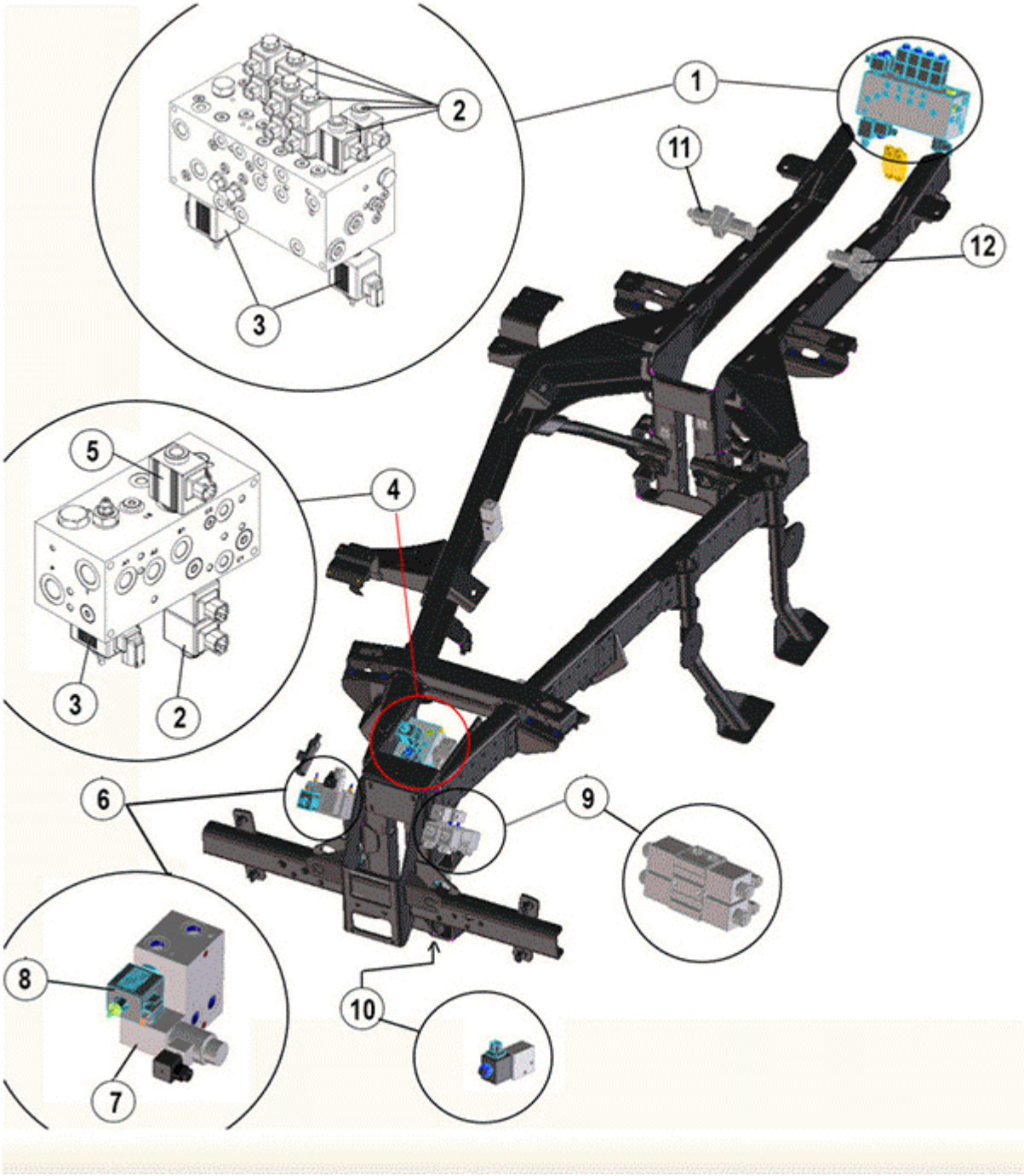

FIGURA	REFERENCIA	DENOMINACIÓN	CANTIDAD
001	48.10420.02	FRONT VALVE BLOCK	1
002	RXOD02172030OB00	SPOOL (12V,20W)	13
003	RXOD0209203POB01	SPOOL (12V,23W)	3
004	48.10410.00	TURBINE VALVE BLOCK-BOX	1
005	RXOD02072030OB02	SPOOL (12V,30W)	1
006	48.10440.00	FAN RADIATOR VALVE	1
007	RXR933007480	SPOOL	1

008	RXR901110011	SPOOL (12V,23W)	1
009	48.10450.01	4 WHEELS STEERING VALVE	1
010	48.10455.00	BLOCK VALVE	2
011	48.10490.00	SOLENOID	1
012	48.10480.00	SOLENOID	1

10. HYDRAULIC DIAGRAM INSTALLATION

VALVES

BASTIDOR: 71018

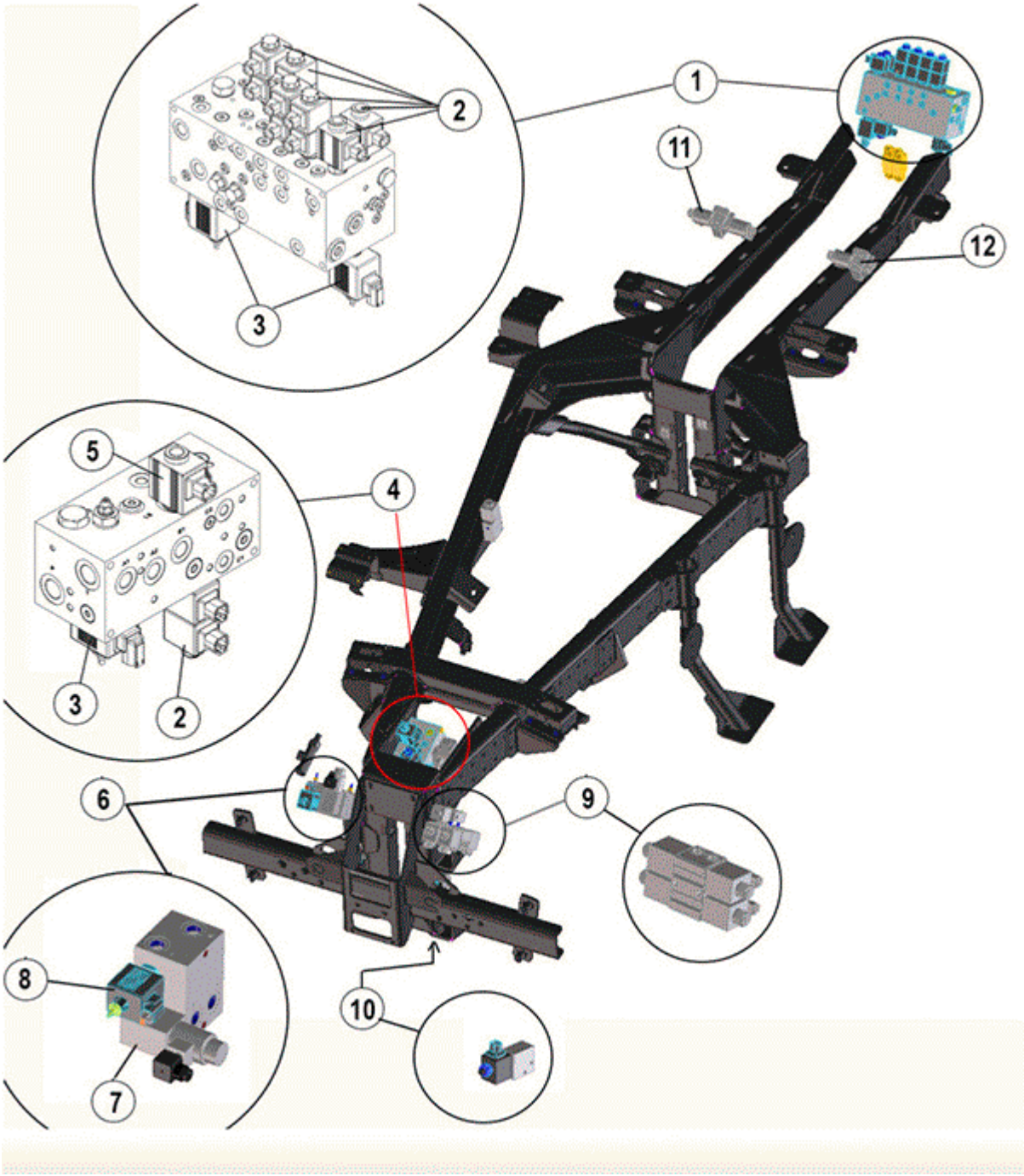

FIGURA	REFERENCIA	DENOMINACIÓN	CANTIDAD
001	48.10420.03	FRONT VALVE BLOCK	1
002	RXOD02172030OB00	SPOOL (12V,20W)	13
003	RXOD0209203POB01	SPOOL (12V,23W)	3
004	48.10410.00	TURBINE VALVE BLOCK-BOX	1
005	RXOD02072030OB02	SPOOL (12V,30W)	1
006	48.10440.00	FAN RADIATOR VALVE	1
007	RXR933007480	SPOOL	1

008	RXR901110011	SPOOL (12V,23W)	1
009	48.10450.01	4 WHEELS STEERING VALVE	1
010	48.10455.00	BLOCK VALVE	2
011	48.10490.00	SOLENOID	1
012	48.10480.00	SOLENOID	1

10. HYDRAULIC DIAGRAM INSTALLATION

VALVES

BASTIDOR: 71901

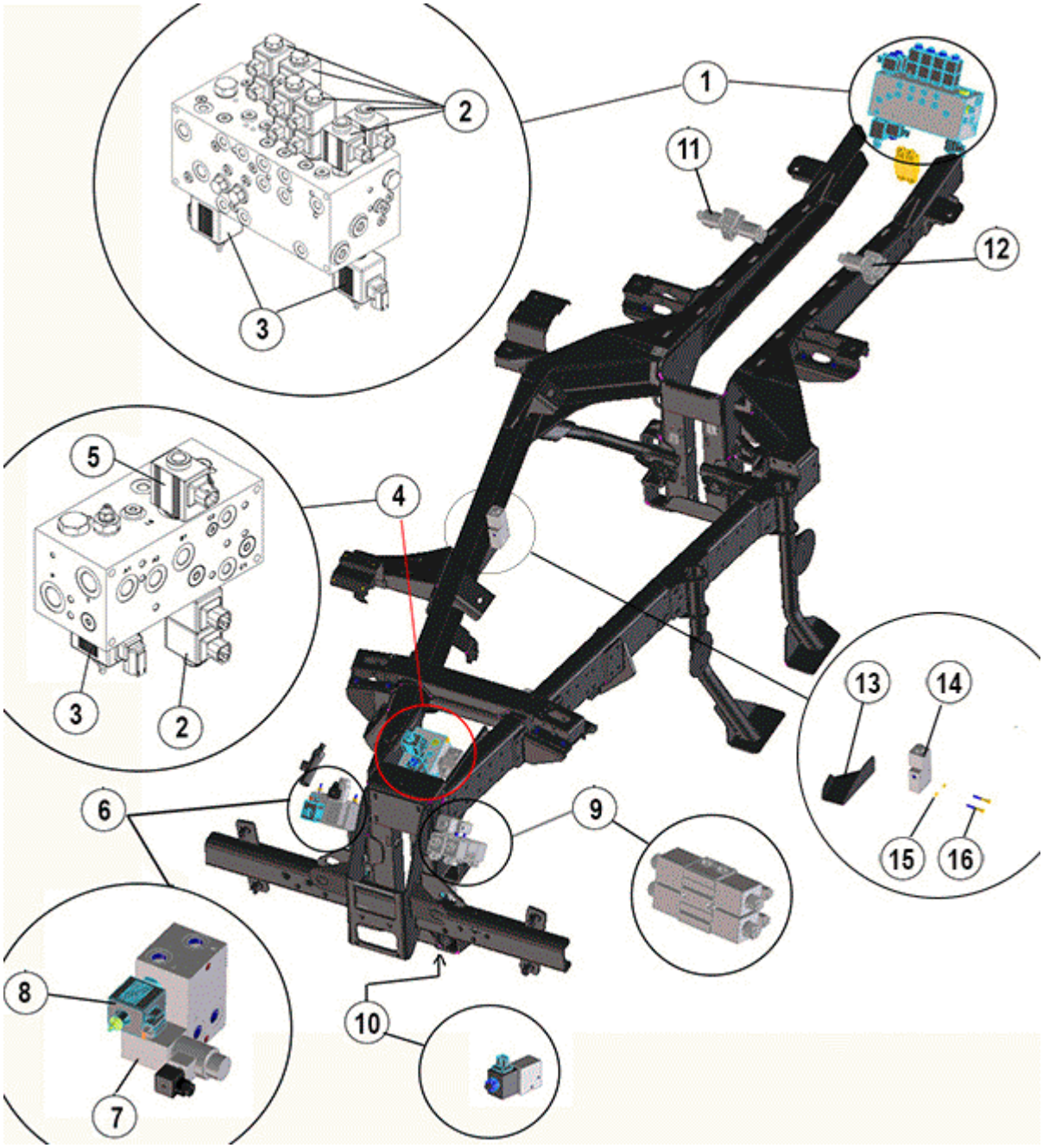

FIGURA	REFERENCIA	DENOMINACIÓN	CANTIDAD
001	48.10420.03	FRONT VALVE BLOCK	1
002	RXOD02172030OB00	SPOOL (12V,20W)	13
003	RXOD0209203POB01	SPOOL (12V,23W)	3
004	48.10410.00	TURBINE VALVE BLOCK-BOX	1
005	RXOD02072030OB02	SPOOL (12V,30W)	1
006	48.10440.00	FAN RADIATOR VALVE	1
007	RXR933007480	SPOOL	1
008	RXR901110011	SPOOL (12V,23W)	1
009	48.10450.01	4 WHEELS STEERING VALVE	1

010	48.10455.00	BLOCK VALVE	2
011	48.10490.00	SOLENOID	1
012	48.10480.00	SOLENOID	1
013	48.05205.00	FIXATION SUPPORT BRAKE VALVE	1
014	48.10460.00	VALVE SIGNAL CHANGING SPEED	1
015	104.06000.00	WASHER DIN7980 D6	2
016	604.06045.87	SCREW M6X45 DIN931	2

10. HYDRAULIC DIAGRAM INSTALLATION

BACK FAST PLUGS

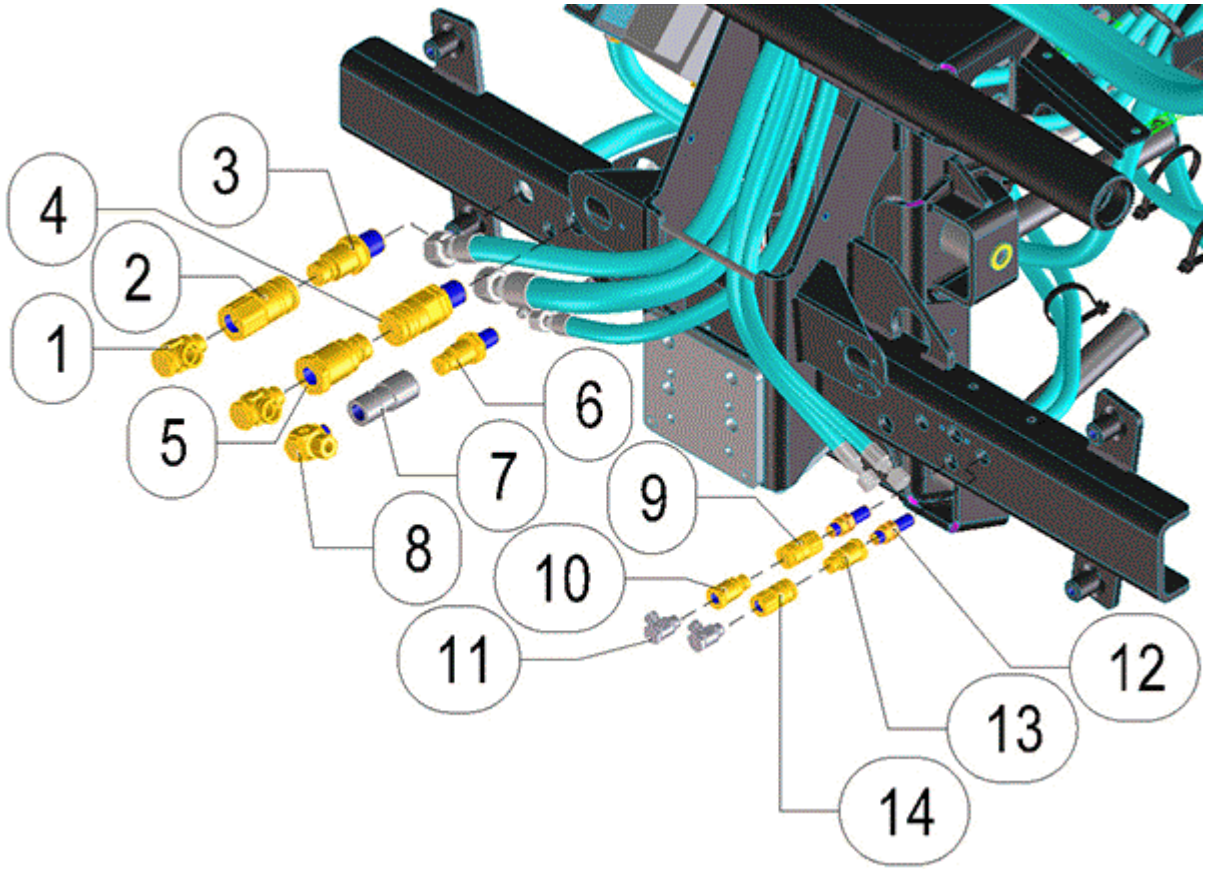

FIGURA	REFERENCIA	DENOMINACIÓN	CANTIDAD
001	48.10409.00	RACOR C90TO/M 1/2BSP - M26X1	2
002	46.10143.00	FEMALE FAST PLUG 1/2 GAS	1
003	46.10900.00	ECOLOGICAL MALE CONECTOR M26	1
005	46.10142.00	FAST PLUG 1/2 GAS SCREWED	1
006	46.10902.00	ECOLOGICAL CONNECTOR M18	1
007	46.50763.00	FAST PLUG 3/8G	1
008	64.10311.00	GASKET MET. BUNA	1
009	46.10912.10	CONNECTOR B	1
010	46.10901.10	CONNECTOR A	1
011	48.10936.00	RACOR C90TO/M 1/4BSP-MM M14X1	2
012	10.13380.00	NIPPLE M/M	2
013	46.10901.10	CONNECTOR A	1
014	46.10912.10	CONNECTOR B	1

10. HYDRAULIC DIAGRAM INSTALLATION

FRONT FAST PLUGS

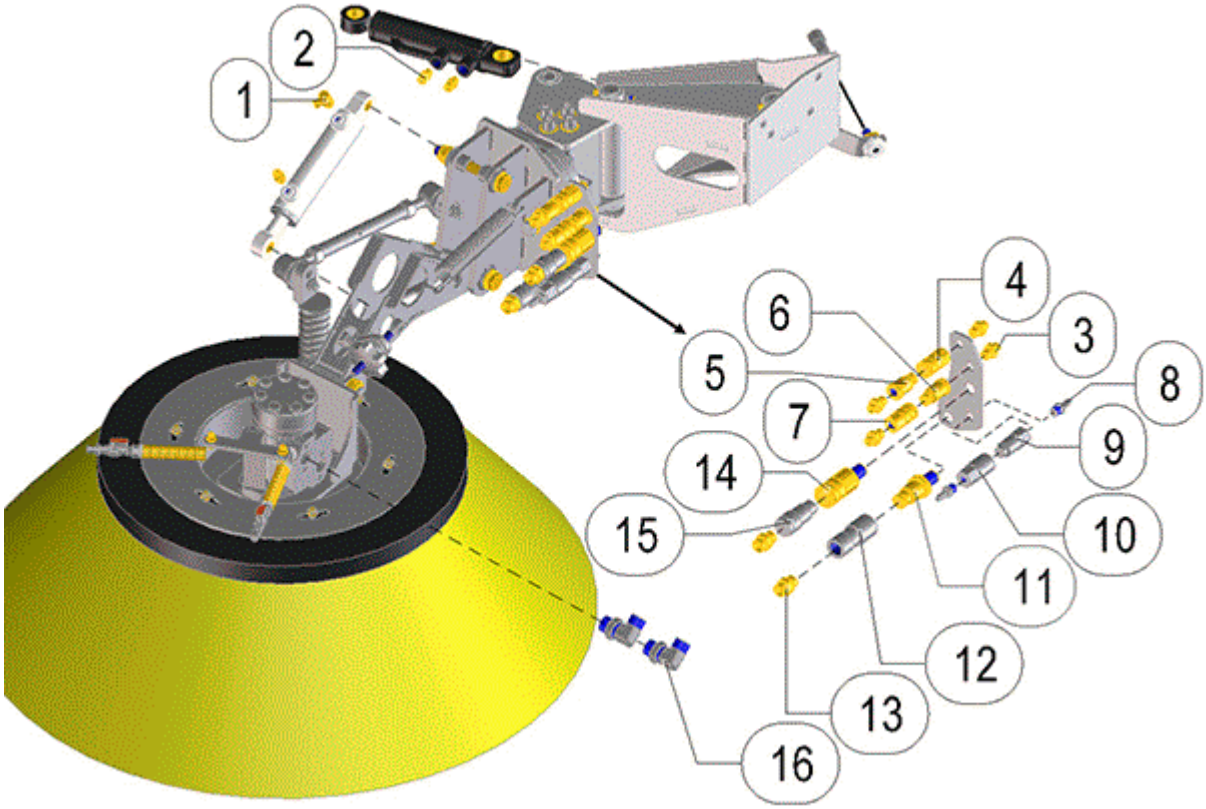

FIGURA	REFERENCIA	DENOMINACIÓN	CANTIDAD
001	46.58175.00	RACOR C90M/M M12X1/8` B.S.P.	1
002	48.10351.00	FITTING M/M 1/8 BSP M12X1.5	3
003	17.10169.00		4
004	46.10912.10	CONNECTOR B	1
005	46.10901.10	CONNECTOR A	1
006	46.10901.10	CONNECTOR A	1
007	46.10912.10	CONNECTOR B	1
008	46.95657.00	RACOR M/M 1/4GAS SPIKE D8	2
009	46.58124.00	QUICK PLUGS MALE 1 / 4 "IN	1
010	46.58123.00	QUICK PLUGS FEMALE 1 / 4 "IN	1
011	46.10902.00	ECOLOGICAL CONNECTOR M18	1
012	46.50763.00	FAST PLUG 3/8G	1
013	48.10836.00	RACOR M/M MB 3/8 BSP - MM M18L	2
014	46.10907.00	ECOLOGICAL CONNECTOR M18X1	1
015	46.50764.00	QUICK PLUG 3/8G	1
016	20.10268.00	ELBOW C90MO/M NIPPLE	2

10. HYDRAULIC DIAGRAM INSTALLATION

HYDRAULIC INSTALLATION

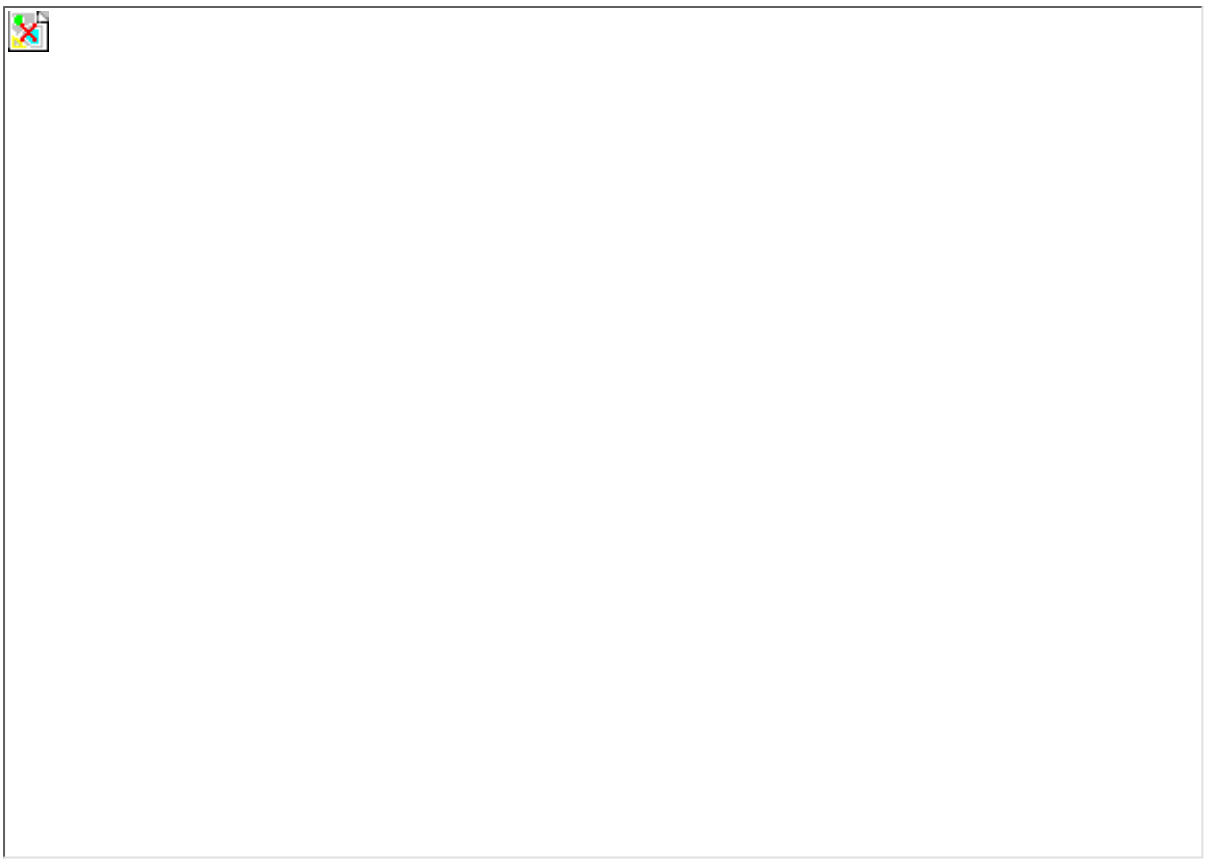

FIGURA	REFERENCIA	DENOMINACIÓN	CANTIDAD

10. HYDRAULIC DIAGRAM INSTALLATION

ACTUATORS (4X2X2)

BASTIDOR: 72014

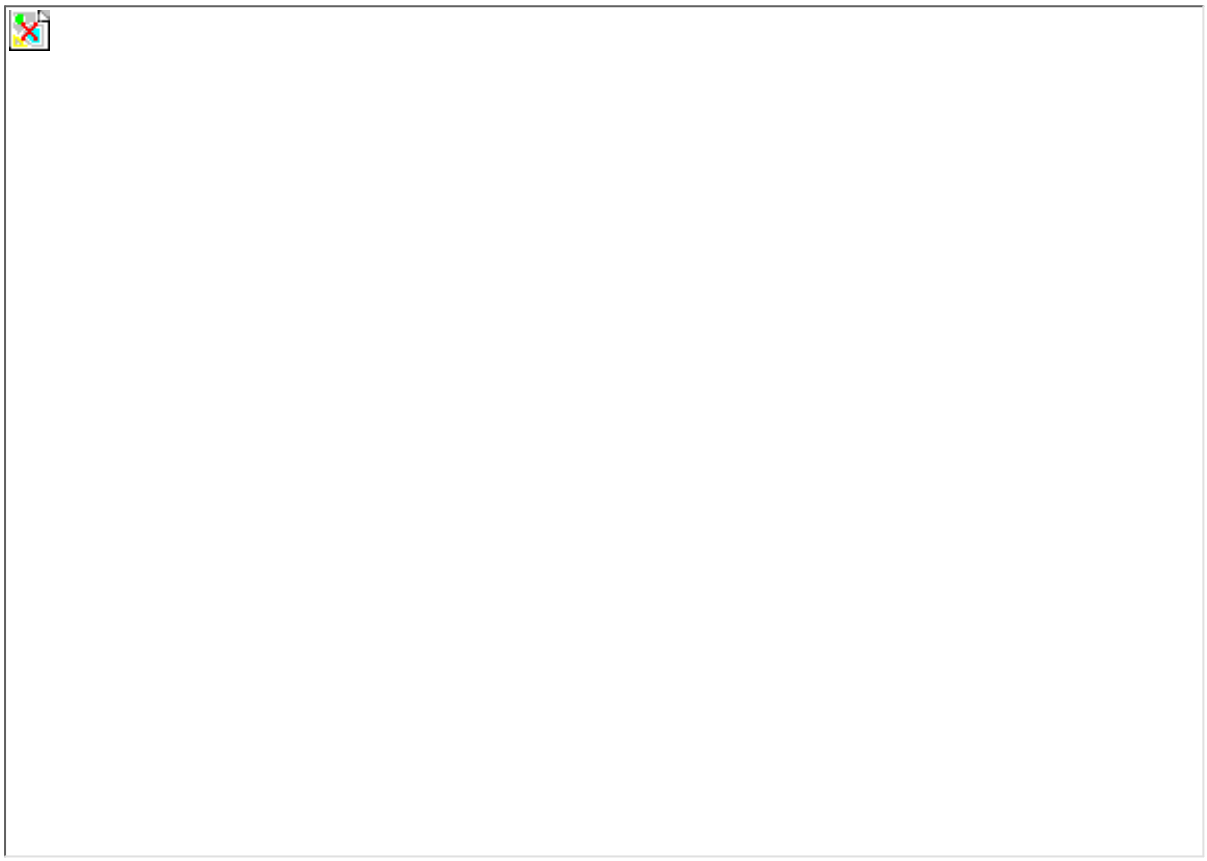

FIGURA	REFERENCIA	DENOMINACIÓN	CANTIDAD
101	48.10224.00	RACOR M/M -3/4"BSP / M30X2	4
127	48.10403.00	FITTING SCREW MB 1/2 BSP	4
144	48.10939.00	TUBE 1SN L790 TLM14- TLM12	1
170	57.10316.00	FITTING M/M M14X1.5-M12X1.5	4
170	57.10316.00	FITTING M/M M14X1.5-M12X1.5	4
172	48.10968.00	FITTING M/M M12X1.5 L6	1
173	48.10223.00	RACOR C90M/TL -M26X1,5	2
173	48.10223.00	RACOR C90M/TL -M26X1,5	1
174	48.10445.00	RACOR M/M MB26X1,5-MM M26X1.5	1
176	48.10451.00	RACOR C90M/TL M18X1,5	1
180	48.10259.00	RACOR FORT M/TL/M -M30X2	1
180	48.10259.00	RACOR FORT M/TL/M -M30X2	1
186	32.10130.00	GASKET COMPAC. D128X90X4	1
188	46.10450.00		1
203	48.10233.00	RACOR M/M -M36X2	1
205	48.10418.00	RACOR C90MO/M M42X2 - MM M42X2	1
206	48.10234.00	RACOR M/TL MF1/2"BSP / M26X1,5	1
208	48.10235.00	RACOR M/M -1/2"BSP / M22X1,5	1
358	46.58184.00	RACOR M / M 3/8BSP-M14X1.5	4

363	48.10428.00	FLANGE SAE 3000 1"BSP	1
363/1	46.10844.00	O-RING DIN6505 SAE 1	1
364	48.10429.00	FLANGE SAE 3000 3/4"BSP	1
364/1	70.10211.00	FITTING M/M M30-3/4GAS	1
365	70.10207.00	FITTING M/M M26x3/4BSP	1
367	70.10210.00	FITTING M/M M26xM22	1
385	46.58184.00	RACOR M / M 3/8BSP-M14X1.5	1
385	46.58184.00	RACOR M / M 3/8BSP-M14X1.5	1
388	48.10235.00	RACOR M/M -1/2"BSP / M22X1,5	2
389	48.10436.00	FLANGE SAE D35 1/2"	2
390	48.10437.00		2
433	48.10288.00	FLANGE SAE D40 XX D20	2
434	46.10911.00	FITTING FORT M/M/TL M22	1
435	48.10435.00	RACOR M/M M22X1,5	1
435	48.10435.00	RACOR M/M M22X1,5	1
439	48.10434.00	RACOR M/M 1/4"BSP / M14X1,5	4
614	17.10247.00	RACOR C90M/TL M22	1

10. HYDRAULIC DIAGRAM INSTALLATION

ACTUATORS (4X2X2)

BASTIDOR: 72014

FIGURA	REFERENCIA	DENOMINACIÓN	CANTIDAD
643	70.10222.00	FITTING M/M M18x3/8BSP	3
646	48.10259.00	RACOR FORT M/TL/M -M30X2	1
648	48.10453.00	RACOR M/TL -MF M22X1,5 / TL M3	1
649	46.10881.00	RACORD	1
651	48.10349.00	NUT M22X1.5	1
652	48.10350.00	PLUG M22X1.5	1
701	48.10451.00	RACOR C90M/TL M18X1,5	2
701	48.10451.00	RACOR C90M/TL M18X1,5	2
754	48.10253.00	RACOR C90MO/M -1" / MF M36	1
801	08.00317.00	METALLIC GASKET BUNA D3/8	4
804	30.10333.00	FITTING	1
808	48.10120.00	PLUG. MALE M12X1.5 ALLEN	4
836	48.10240.00	RACOR C90MO/M -M ORIENT. M26	1
837	30.10334.00	FITTING M18X1.5	2
837	30.10334.00	FITTING M18X1.5	2
860	46.58175.00	RACOR C90M/M M12X1/8` B.S.P.	4
860	46.58175.00	RACOR C90M/M M12X1/8` B.S.P.	4
860	46.58175.00	RACOR C90M/M M12X1/8` B.S.P.	4
869	46.10068.00	UNRETURN VALVE UNIDIRECC	1
870	28.00338.00	NIPPLE M/H	4

871	70.10232.00	FITTING C90M/M M16-1.5x1/4BSP	4
872	70.10258.00	NIPPLE FORT M/TL/M M16-1.5	2
876	33.10201.00	C90M/TL CONNECTOR M12X1, 5	2
878	48.10454.00	FITTING TL/M M14X1.5 L8	1
912	46.10882.00	RACORD	1
913	46.58008.00	NIPPLE C90M/M M22XM18	1
919	46.10852.00	CONNECTOR M / M M36-M26	1
921	32.10154.00	RACOR M / TL 1/4BSP - M14	2
924	48.10902.00	TUBE 1SN DN5 L550 TLM12-TLM14	2
925	48.10903.00	TUBE 1SN DN5 L650 TLM12-TLM14	1
926	48.10904.00	TUBE 2SN DN12 L800 C90M22-TLM2	1
927	48.10905.00	TUBE 3/4" DN 19	1
928	48.10906.00	TUBE 1/4" DN6	1
929	48.10907.00	TUBE 1SN L210 TLM16-TLM16	1
930	48.10908.00	TUBE 3/8" DN 10	1
933	48.10911.00	TUBE 3/16" DN 5	1

10. HYDRAULIC DIAGRAM INSTALLATION

ACTUATORS (4X2X2)

BASTIDOR: 72014

FIGURA	REFERENCIA	DENOMINACIÓN	CANTIDAD
935	48.10913.00	TUBE 3/16" DN 5	1
937		FIXING SUPPORT 60x160x290	1
938	48.10916.00	TUBE 3/16"	1
939	48.10917.00	TUBE 3/16"	1
940	48.10918.00	TUBE 3/16"	1
941	48.10919.00	TUBE 3/8" DN 10	1
942	48.10920.00	TUBE 3/8" DN 10	1
945	48.10932.01	TUBE 1/4" DN6	1
946	46.58112.00		1
947	48.10833.00	FITTING M/M MB M22x1.5 MM M18x1.	1
950	48.10935.00	FITTING FORT M/TL/M MM M12X1.5 L	2
951	48.10222.00	FITTING M/M -MB M12X1.5 - MM M12	1
956	35.10104.00	SCREW DIN912 M8X25	1
957	48.10936.00	RACOR C90TO/M 1/4BSP-MM M14X1	2
959	48.10938.00	TUBE 1/4" DN 6	2
960	17.10116.00	FITTING TEE M/M/M M16X1.5	1
967	48.10457.00	RACOR M/M -M16X1,5 / 1/4"BSP	1
968	46.58183.00		1
969	48.10332.00	RACOR M/M 1/4 BSP - M18X1.5	2
978	48.10351.00	FITTING M/M 1/8 BSP M12X1.5	4
980	48.10352.00	TUBE 1SN L230 C90M16- TLM16	1

981	48.10353.00	TUBE 3/16" DN 5	1
982	48.10354.00	TUBE 3/16" DN 5	1
989	48.10375.00	FITTING M/TL MM M18x1.5-TLM30x2	1

OBSERVACIONES

MOD.5453(A)

10. HYDRAULIC DIAGRAM INSTALLATION

TRANSMISSION (4X2X2)

BASTIDOR: 71901

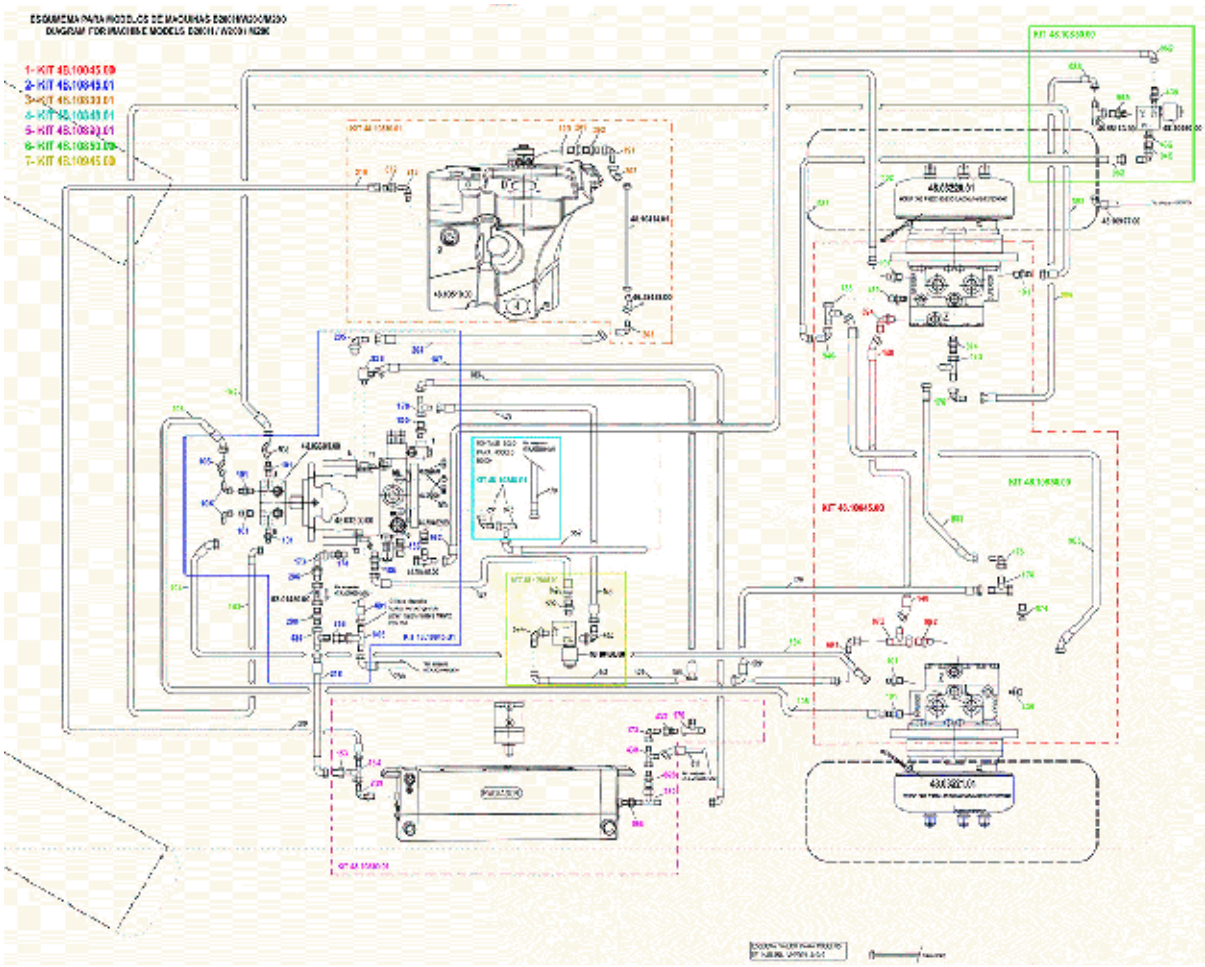

FIGURA	REFERENCIA	DENOMINACIÓN	CANTIDAD
001	48.10045.00	REAR BRAKE NEGATIVE KIT	1
002	48.10845.01	HYDRAULIC KIT	1
003	48.10830.01	BASE FRAME HYDRAULIC KIT	1
003	48.10830.01	BASE FRAME HYDRAULIC KIT	1
004	48.10848.01	FRAME HYDRAULIC KIT B-200	1
005	48.10830.01	BASE FRAME HYDRAULIC KIT	1
006	48.10850.00	HYDRAULIC KIT	1
007	48.10945.00	HYDRAULIC KIT	1
101	48.10224.00	RACOR M/M -3/4"BSP / M30X2	4
101	48.10224.00	RACOR M/M -3/4"BSP / M30X2	4
102	48.10225.00	TUBE R10T 3/4 -700 TL C45 M30	1
103	48.10226.00	TUBE R10T 3/4 -975 C90 TL M30X	1
104	48.10227.00	TUBE R10T 3/4 -850 TL M30 / C4	1
105	48.10228.00	TUBE R10T 3/4 -900 TL M30 / C4	1
106	46.58004.01	RACOR C90M/TL M30-M30 SERIE PE	4
129	70.10200.00	METAL GASKET BUNA 1``	1

129	70.10200.00	METAL GASKET BUNA 1``	1
141	48.10020.00	TUBE 1SN L1020 M16-C90M16	1
142	48.10021.00	TUBO 1SN L670 M16-C90M16	1
143	48.10022.00	TUBE 1SN L450 M16-M18	1
153	20.10555.00	RACOR M/TL M22X1.5-M30X2	1
154	57.10311.00	FITTING TEE M/M/TL M30X2	1
156	48.10943.00	RACOR	1
173	48.10223.00	RACOR C90M/TL -M26X1,5	1
174	48.10445.00	RACOR M/M MB26X1,5-MM M26X1.5	1
176	48.10451.00	RACOR C90M/TL M18X1,5	2
176	48.10451.00	RACOR C90M/TL M18X1,5	1
178	20.10297.00	THREE-WAY UNION M/M/TL	2
178	20.10297.00	THREE-WAY UNION M/M/TL	1
180	48.10259.00	RACOR FORT M/TL/M -M30X2	1
185	32.10064.00	ELBOW C90M/M NIPPLE	2
188	46.10450.00		2
191	48.10439.00	RACOR C90M/TL M36X2	2
191	48.10439.00	RACOR C90M/TL M36X2	2
196	48.10241.00	RACOR M/TL -MF 3/4"BSP / TL M3	1
201	48.10421.00	RACOR M/H 1"BSP	1

10. HYDRAULIC DIAGRAM INSTALLATION

TRANSMISSION (4X2X2)

BASTIDOR: 71901

FIGURA	REFERENCIA	DENOMINACIÓN	CANTIDAD
201	48.10421.00	RACOR M/H 1"BSP	1
201	48.10421.00	RACOR M/H 1"BSP	1
202	46.58453.00	RACOR C45M/TL M36	1
202	46.58453.00	RACOR C45M/TL M36	1
203	48.10233.00	RACOR M/M -M36X2	1
203	48.10233.00	RACOR M/M -M36X2	1
204	48.10419.00	TUBE R1T1 -555 TL-15/8JIC-C90	1
205	48.10418.00	RACOR C90MO/M M42X2 - MM M42X2	1
208	48.10235.00	RACOR M/M -1/2"BSP / M22X1,5	1
209	48.10236.00	RACOR C90MO/M -MO3/4"BSP / M30	1
213	48.10253.00	RACOR C90MO/M -1" / MF M36	1
213	48.10253.00	RACOR C90MO/M -1" / MF M36	1
218	48.10252.00	TUBE R1T1/2 -500 C90TL M22 / T	1
219	48.10355.00	TUBE R1T3/4 C90TLM30-TLM30-500	1
362	12.10301.00	FITTING M/M M36-1G	2
362	12.10301.00	FITTING M/M M36-1G	2
372	48.10424.00	RACOR M/M M36X2/M45X2	1

374	48.10426.00	RACOR M/TL M45X2/1"1/4BSP	1
401	48.10585.00	TUBE R1T1/4 C90M14XC90M16X1600	1
430	70.10234.00	CLAMP SAE6000 3/4	1
434	46.10911.00	FITTING FORT M/M/TL M22	1
437	17.10109.00	RACOR M/TL M18X1.5-M26X1.5	1
439	48.10434.00	RACOR M/M 1/4"BSP / M14X1,5	2
439	48.10434.00	RACOR M/M 1/4"BSP / M14X1,5	2
601	48.10442.00	RACOR C90MO/M 3/8"BSP / M18X1	2
672	46.58090.00	FITTING M/M M36-M30	1
672	46.58090.00	FITTING M/M M36-M30	1
691	46.10410.00	NIPPLE	1
694	48.10313.00	RACOR C90MO / M -1 / 4BSP / M16x1,	2
753	48.10320.00	RACOR FORT M/M/TL -M14X1,5	1
756	48.10122.00	FITTING M / MM M18x1.5 TL / TL M22	1
785	48.10834.00	RACOR M/TL M30x2 TL M45x2	1
800	48.10425.00	RACOR FORT M/M/TL M45x2	1
806	46.58004.00	FITTING C90M/TL M30	1
826	57.10307.00	FITTING M/M M30X2/3/4BSP	1
828	46.58062.00	FITTING M/M M30-M26	1

10. HYDRAULIC DIAGRAM INSTALLATION

TRANSMISSION (4X2X2)

BASTIDOR: 71901

FIGURA	REFERENCIA	DENOMINACIÓN	CANTIDAD
830	48.10242.00	FITTING C90M/M -M14 / M12	1
865	46.58113.00	RACOR FORT M/TL/M M18	1
873	46.10401.00	NIPPLE	1
874	70.10229.00	FITTING M/M M18x1/2BSP	2
946	46.58112.00		1
946	46.58112.00		1
969	48.10332.00	RACOR M/M 1/4 BSP - M18X1.5	1
983	48.10356.00	RACOR M/M M30X2	1
986	48.10359.00	TUBE 1SN L1050 C90M18-TLM18	1
992	48.10378.00	RACOR M/M MB 1/4 BSP - M16X1.5	1

10. HYDRAULIC DIAGRAM INSTALLATION

TRANSMISSION (4X2X4)

BASTIDOR: 71901

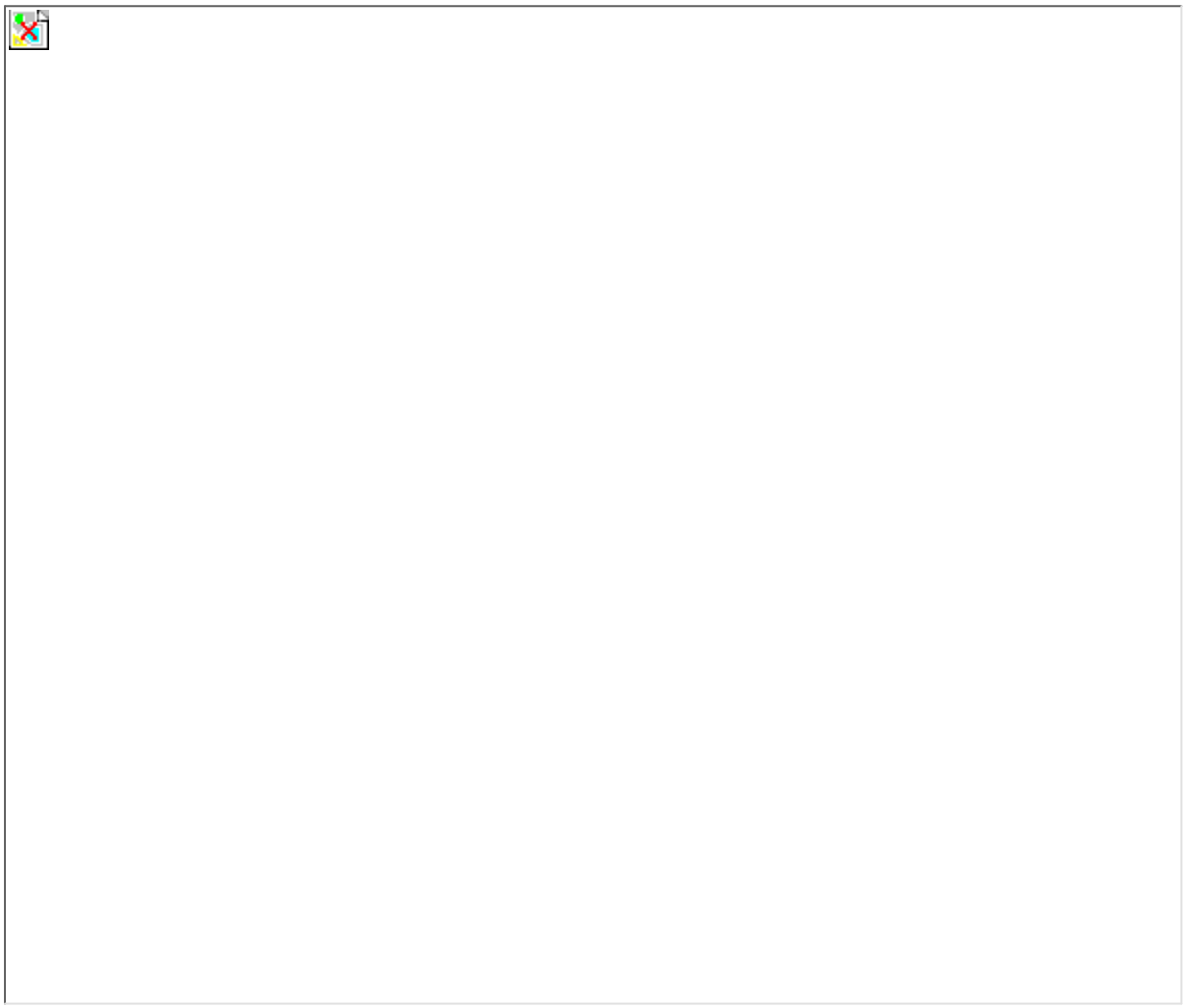

FIGURA	REFERENCIA	DENOMINACIÓN	CANTIDAD
001	48.10045.00	REAR BRAKE NEGATIVE KIT	1
002	48.10845.01	HYDRAULIC KIT	1
003	48.10847.01	HYDRAULIC KIT	1
004	48.10848.01	FRAME HYDRAULIC KIT B-200	1
005	48.10847.01	HYDRAULIC KIT	1
006	48.10842.00	TRANSMISION 4x2x4 HYDRAULIC KIT	1
007	48.10945.00	HYDRAULIC KIT	1
101	48.10224.00	RACOR M/M -3/4"BSP / M30X2	4
101	48.10224.00	RACOR M/M -3/4"BSP / M30X2	4
102	48.10225.00	TUBE R10T 3/4 -700 TL C45 M30	1
103	48.10226.00	TUBE R10T 3/4 -975 C90 TL M30X	1
104	48.10227.00	TUBE R10T 3/4 -850 TL M30 / C4	1
105	48.10228.00	TUBE R10T 3/4 -900 TL M30 / C4	1
106	46.58004.01	RACOR C90M/TL M30-M30 SERIE PE	4
129	70.10200.00	METAL GASKET BUNA 1``	1

129	70.10200.00	METAL GASKET BUNA 1``	1
141	48.10020.00	TUBE 1SN L1020 M16-C90M16	1
142	48.10021.00	TUBO 1SN L670 M16-C90M16	1
143	48.10022.00	TUBE 1SN L450 M16-M18	1
153	20.10555.00	RACOR M/TL M22X1.5-M30X2	1
154	57.10311.00	FITTING TEE M/M/TL M30X2	1
156	48.10943.00	RACOR	1
173	48.10223.00	RACOR C90M/TL -M26X1,5	1
174	48.10445.00	RACOR M/M MB26X1,5-MM M26X1.5	1
176	48.10451.00	RACOR C90M/TL M18X1,5	2
176	48.10451.00	RACOR C90M/TL M18X1,5	1
178	20.10297.00	THREE-WAY UNION M/M/TL	2
178	20.10297.00	THREE-WAY UNION M/M/TL	1
180	48.10259.00	RACOR FORT M/TL/M -M30X2	1
185	32.10064.00	ELBOW C90M/M NIPPLE	2
188	46.10450.00		2
191	48.10439.00	RACOR C90M/TL M36X2	2
191	48.10439.00	RACOR C90M/TL M36X2	2
196	48.10241.00	RACOR M/TL -MF 3/4"BSP / TL M3	1
201	48.10421.00	RACOR M/H 1"BSP	1
201	48.10421.00	RACOR M/H 1"BSP	1

10. HYDRAULIC DIAGRAM INSTALLATION

TRANSMISSION (4X2X4)

BASTIDOR: 71901

FIGURA	REFERENCIA	DENOMINACIÓN	CANTIDAD
201	48.10421.00	RACOR M/H 1"BSP	1
202	46.58453.00	RACOR C45M/TL M36	1
202	46.58453.00	RACOR C45M/TL M36	1
203	48.10233.00	RACOR M/M -M36X2	1
203	48.10233.00	RACOR M/M -M36X2	1
204	48.10419.00	TUBE R1T1 -555 TL-15/8JIC-C90	1
205	48.10418.00	RACOR C90MO/M M42X2 - MM M42X2	1
208	48.10235.00	RACOR M/M -1/2"BSP / M22X1,5	1
209	48.10236.00	RACOR C90MO/M -MO3/4"BSP / M30	1
213	48.10253.00	RACOR C90MO/M -1" / MF M36	1
213	48.10253.00	RACOR C90MO/M -1" / MF M36	1
218	48.10252.00	TUBE R1T1/2 -500 C90TL M22 / T	1
219	48.10355.00	TUBE R1T3/4 C90TLM30-TLM30-500	1
362	12.10301.00	FITTING M/M M36-1G	2
362	12.10301.00	FITTING M/M M36-1G	2
372	48.10424.00	RACOR M/M M36X2/M45X2	1

374	48.10426.00	RACOR M/TL M45X2/1"1/4BSP	1
401	48.10585.00	TUBE R1T1/4 C90M14XC90M16X1600	1
430	70.10234.00	CLAMP SAE6000 3/4	1
434	46.10911.00	FITTING FORT M/M/TL M22	1
437	17.10109.00	RACOR M/TL M18X1.5-M26X1.5	1
439	48.10434.00	RACOR M/M 1/4"BSP / M14X1,5	2
439	48.10434.00	RACOR M/M 1/4"BSP / M14X1,5	2
439	48.10434.00	RACOR M/M 1/4"BSP / M14X1,5	1
601	48.10442.00	RACOR C90MO/M 3/8"BSP / M18X1	2
672	46.58090.00	FITTING M/M M36-M30	1
672	46.58090.00	FITTING M/M M36-M30	1
691	46.10410.00	NIPPLE	1
694	48.10313.00	RACOR C90MO / M -1 / 4BSP / M16x1,	2
753	48.10320.00	RACOR FORT M/M/TL -M14X1,5	1
756	48.10122.00	FITTING M / MM M18x1.5 TL / TL M22	1
785	48.10834.00	RACOR M/TL M30x2 TL M45x2	1
800	48.10425.00	RACOR FORT M/M/TL M45x2	1
806	46.58004.00	FITTING C90M/TL M30	1
826	57.10307.00	FITTING M/M M30X2/3/4BSP	1
828	46.58062.00	FITTING M/M M30-M26	1

10. HYDRAULIC DIAGRAM INSTALLATION

TRANSMISSION (4X2X4)

BASTIDOR: 71901

FIGURA	REFERENCIA	DENOMINACIÓN	CANTIDAD
830	48.10242.00	FITTING C90M/M -M14 / M12	1
865	46.58113.00	RACOR FORT M/TL/M M18	1
873	46.10401.00	NIPPLE	1
874	70.10229.00	FITTING M/M M18x1/2BSP	2
946	46.58112.00		1
946	46.58112.00		1
962	48.10221.00	HOSE 1SN L650 C90M22-TLM22	1
963	48.10327.00	HOSE 1SN L1080 C90M14-C45M14	1
964	48.10328.00	HOSE 1SN L880 C90M14-C90M16	1
969	48.10332.00	RACOR M/M 1/4 BSP - M18X1.5	1
983	48.10356.00	RACOR M/M M30X2	1
986	48.10359.00	TUBE 1SN L1050 C90M18-TLM18	1
992	48.10378.00	RACOR M/M MB 1/4 BSP - M16X1.5	1

OBSERVACIONES

10. HYDRAULIC DIAGRAM INSTALLATION

TURBINE ENGINE CONNECTIONS

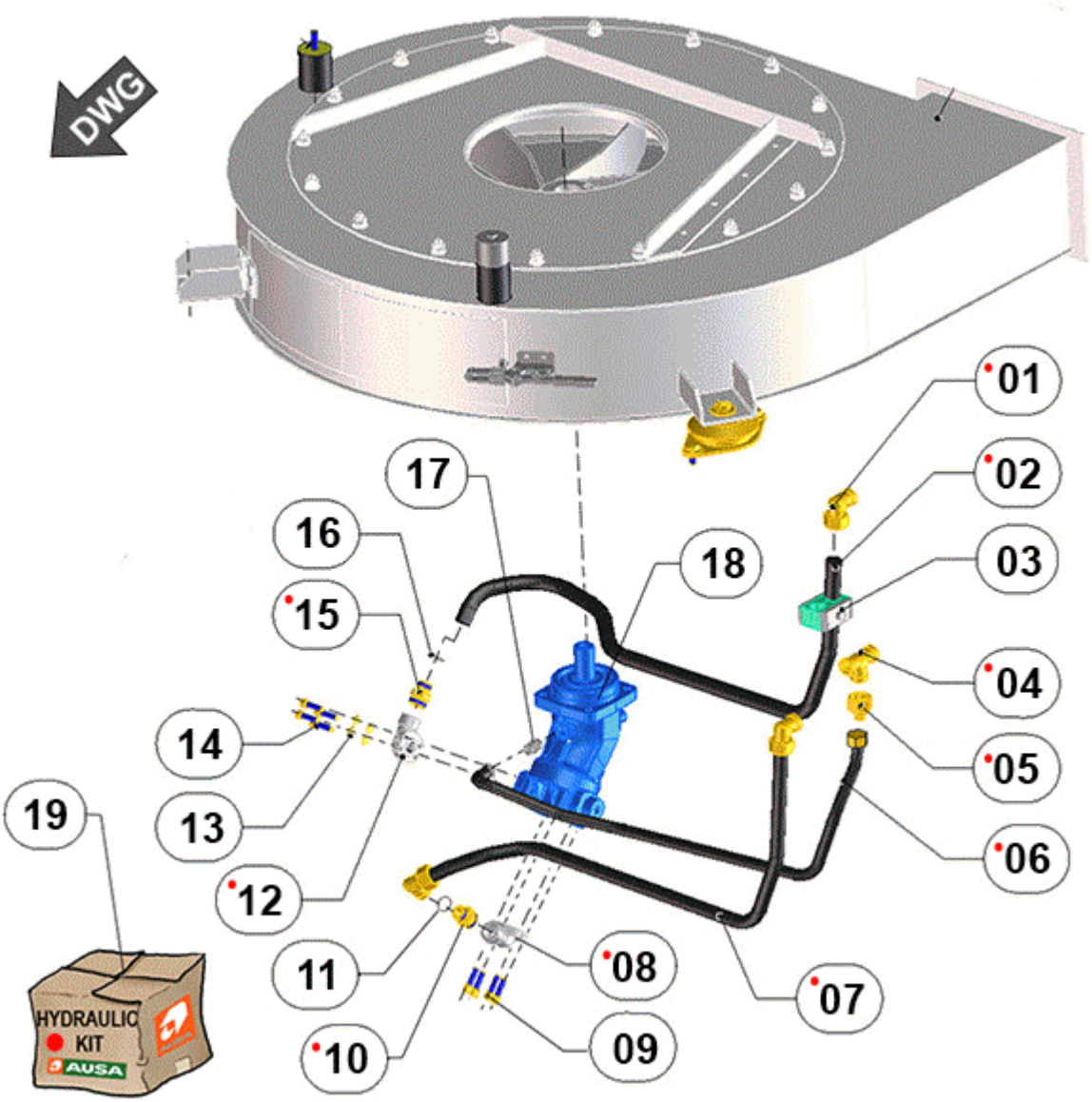

FIGURA	REFERENCIA	DENOMINACIÓN	CANTIDAD
001	48.10223.00	RACOR C90M/TL -M26X1,5	2
002	48.09387.00	TUBE 5/8 C45M26-TLM26-1100	2
003	46.04298.00	HOSE CLAMP Ø22	1
004	48.09391.00	FITTING FORT M/M/M - M26	1
005	48.09392.00	FITTING M/TL - M16 - M26	1
006	48.09388.00	TUBE R1T1/4 C90TLM16-TLM16X855	1
007	48.09386.00	TUBE 1/2 C45M24-MM24-950	1
008	48.09393.00	FLANGE SAE6000 C90 H 1/2	1
009	601.08030.87	SCREW DIN912 M8x30	8
010	48.10433.00	RACOR M/M M26X1,5 / 1/2"BSP	1

011	08.00316.00	METALLIC GASKET BUNA D1/2 G	1
012	48.09393.00	FLANGE SAE6000 C90 H 1/2	1
013	104.08000.NX	WASHER DIN7980 D8 INOX	4
014	601.08030.87	SCREW DIN912 M8x30	4
015	48.10433.00	RACOR M/M M26X1,5 / 1/2"BSP	1
016	08.00316.00	METALLIC GASKET BUNA D1/2 G	1
017	32.10130.00	GASKET COMPAC. D128X90X4	1
018	46.09180.00	HYDRAULIC TURBINE ENGINE	1
019	48.09395.00	KIT MOTOR HYDRAULIC TURBINE	1

10. HYDRAULIC DIAGRAM INSTALLATION

TURBINE ENGINE CONNECTIONS

BASTIDOR: 72014

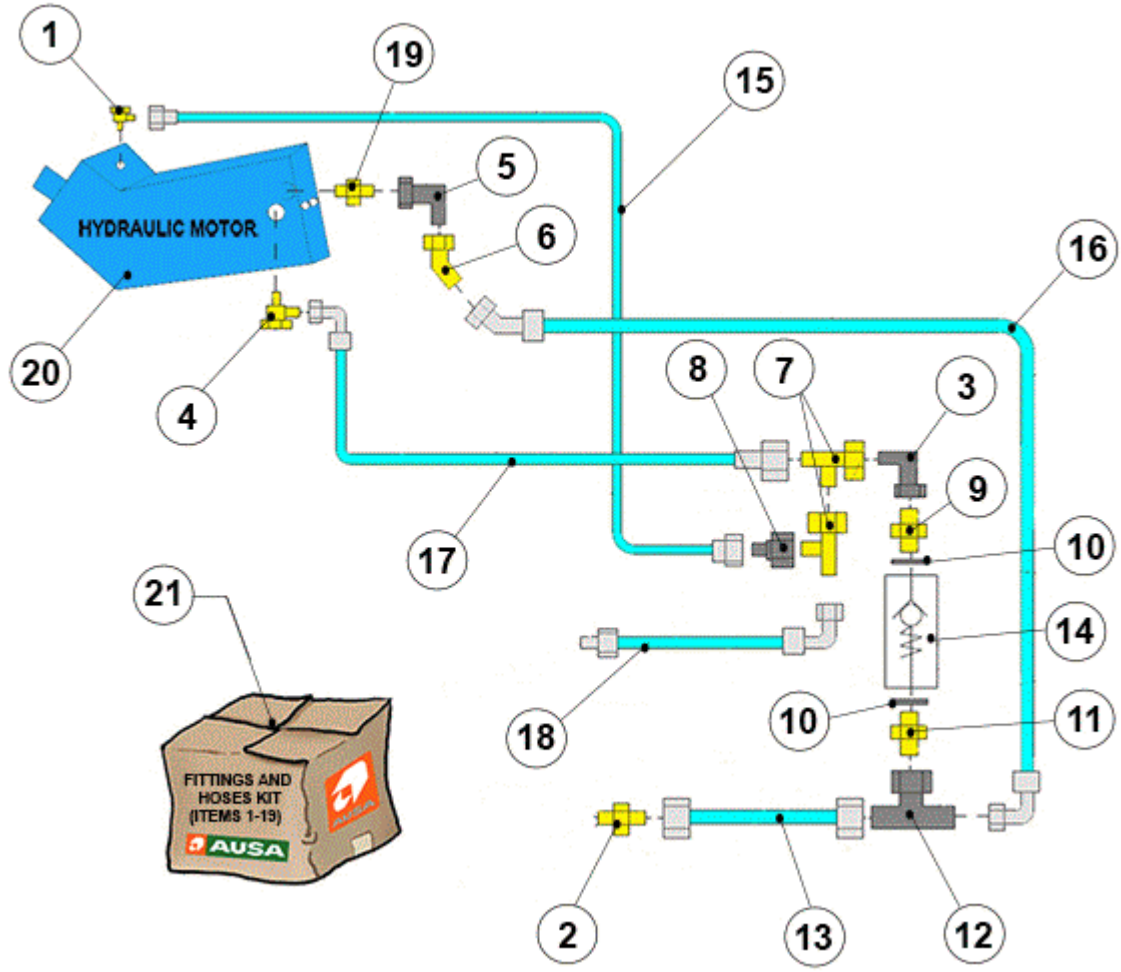

FIGURA	REFERENCIA	DENOMINACIÓN	CANTIDAD
001	48.10242.00	FITTING C90M/M -M14 / M12	1
002	46.10284.00	FITTING M / M M26X1.5 D18 M22x1.5	1
003	48.10223.00	RACOR C90M/TL -M26X1,5	1
004	48.10176.00	FITTING C90MO/M MMM26-MBM22 TORN	1
005	20.10210.00	ELBOW C90M/TL NIPPLE	1
006	48.10285.00	FITTING C45M/TL -M22x1,5	1
007	70.10234.00	CLAMP SAE6000 3/4	2
008	48.10216.00	FITTING M/TL MM M14(L8) TL M26(L	1
009	48.13130.00	RACOR M/M 3/4 GAS-M26	1
010	45.01423.00	GASKET MET. BUNA	2
011	70.10251.00	NIPPLE M/H 3/4GAS-M22X1,5	1
012	46.10881.00	RACORD	1
013	48.10174.00	HOSE D15XD11X110 TLM22-TL	1
014	48.10175.00	RETUR VALVE 3/4 UNIDI	1
015	48.10170.00	HOSE R1T1 TLM14-TLM14X900	1

016	48.10171.00	HOSE R2T1/2 TLC45M22-TLC90M22X	1
017	48.10172.00	HOSE R1T5/8 TLC90M26-TLM26X900	1
018	48.10173.00	HOSE R1T5/8 TLC90M26-MFM26-270	1
019	48.10435.00	RACOR M/M M22X1,5	1
020	48.09180.01	TURBINE MOTEUR HYDRAULIQUE MERC B200H	1
021	48.09395.01	KIT FITTINGS	1

OBSERVACIONES

MOD.5453(A)

MACHINE WORK

HOPPER (PART 1)

BASTIDOR: 72970

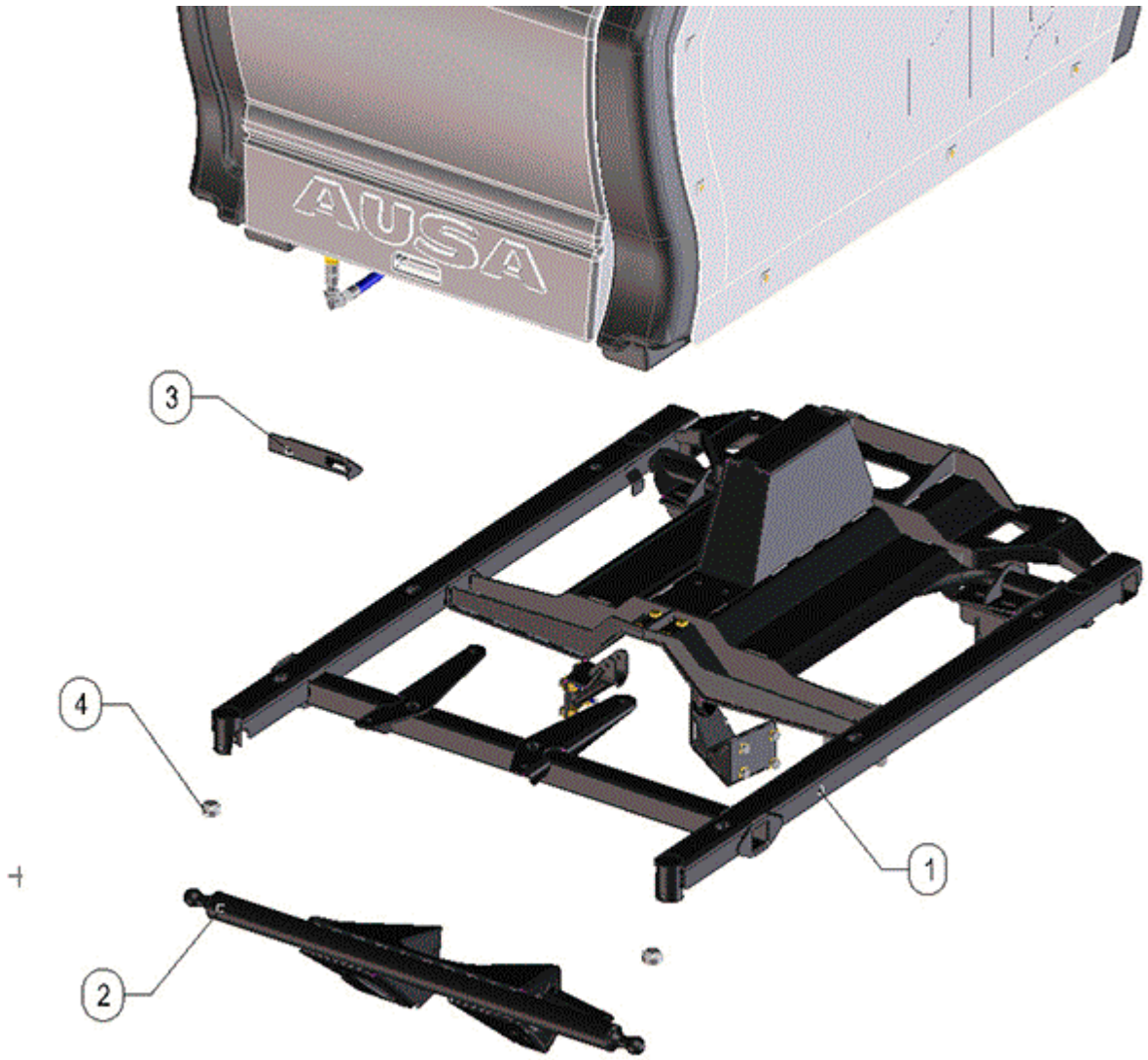

FIGURA	REFERENCIA	DENOMINACIÓN	CANTIDAD
001	48.09821.02	CHASSIS EQUIPMENT	1
002	48.04222.00	SOP. FIXING D63X1180	1
003	48.09815.00	JACK STAND	1
004	48.09822.00	CAP. D45X25	2

MACHINE WORK
HOPPER (PART 2)

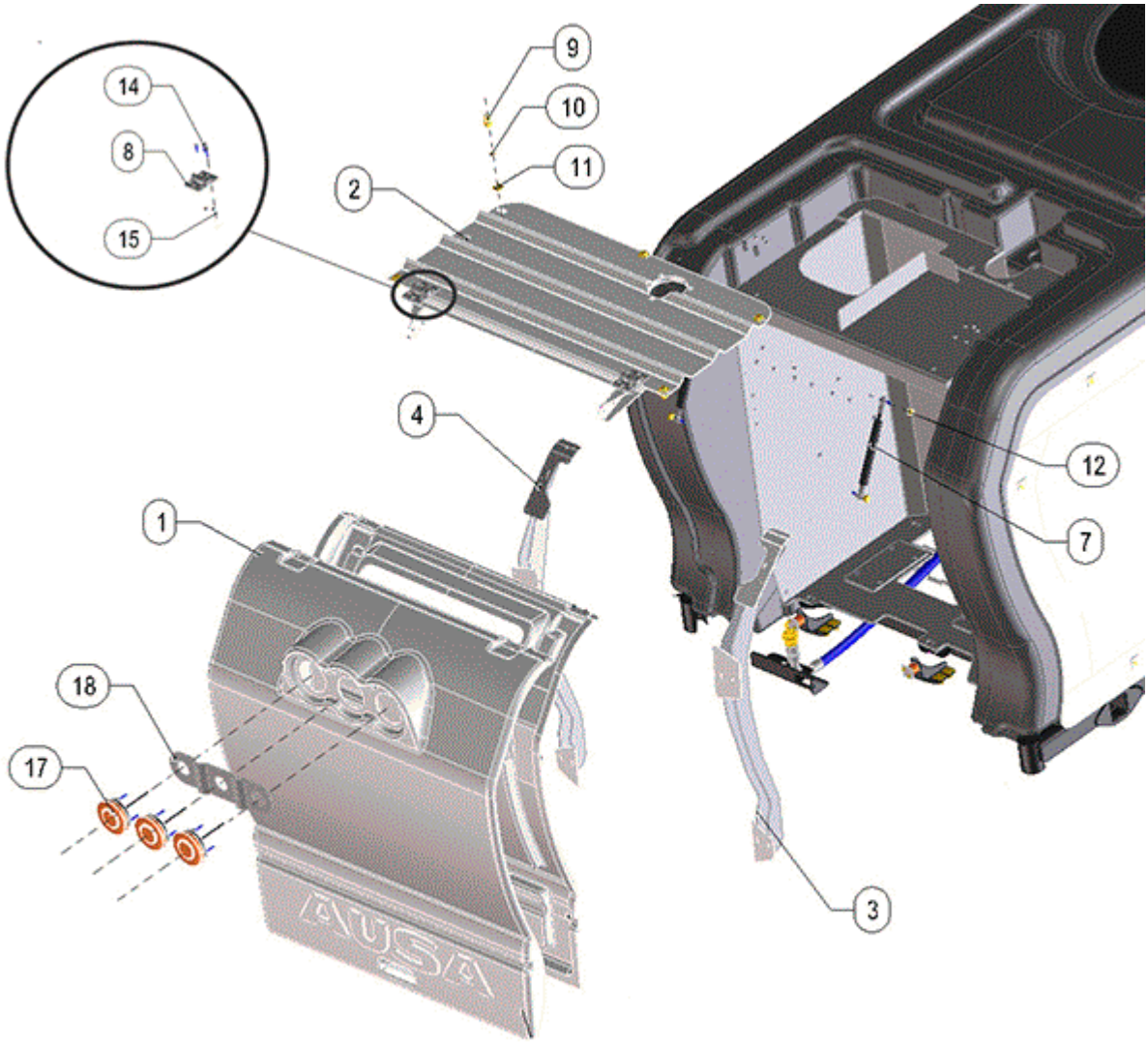

FIGURA	REFERENCIA	DENOMINACIÓN	CANTIDAD
001	48.09803.01	BACK COVER WATER TANK	1
002	48.09804.00	TOP COVER	1
003	48.09837.00	RIGHT DOOR DAMPER SUPPORT	1
004	48.09838.00	SHOCK SUPPORT LEFT DOOR	1
007	33.08057.00	CYLINDER 22X240 450N	2
008	13.08161.00	BOX COVER HINGE	2
009	630.08015.97	SCREW ISO7380 M8X15	5
010	104.08000.00	WASHER DIN7980 D8	5
011	112.08000.67	WASHER DIN9021	5
012	711.08000.67	NUT DIN982 M8	4
014	618.05025.87	SCREW DIN7991 M5X25	10
015	711.05000.67	NUT M5 DIN 982	10

017	48.11083.00	ORANGE LED LIGHT	3
018	48.11085.01	MOUNTING BRACKET	1

MACHINE WORK

HOPPER (PART 4)

BASTIDOR: 72970

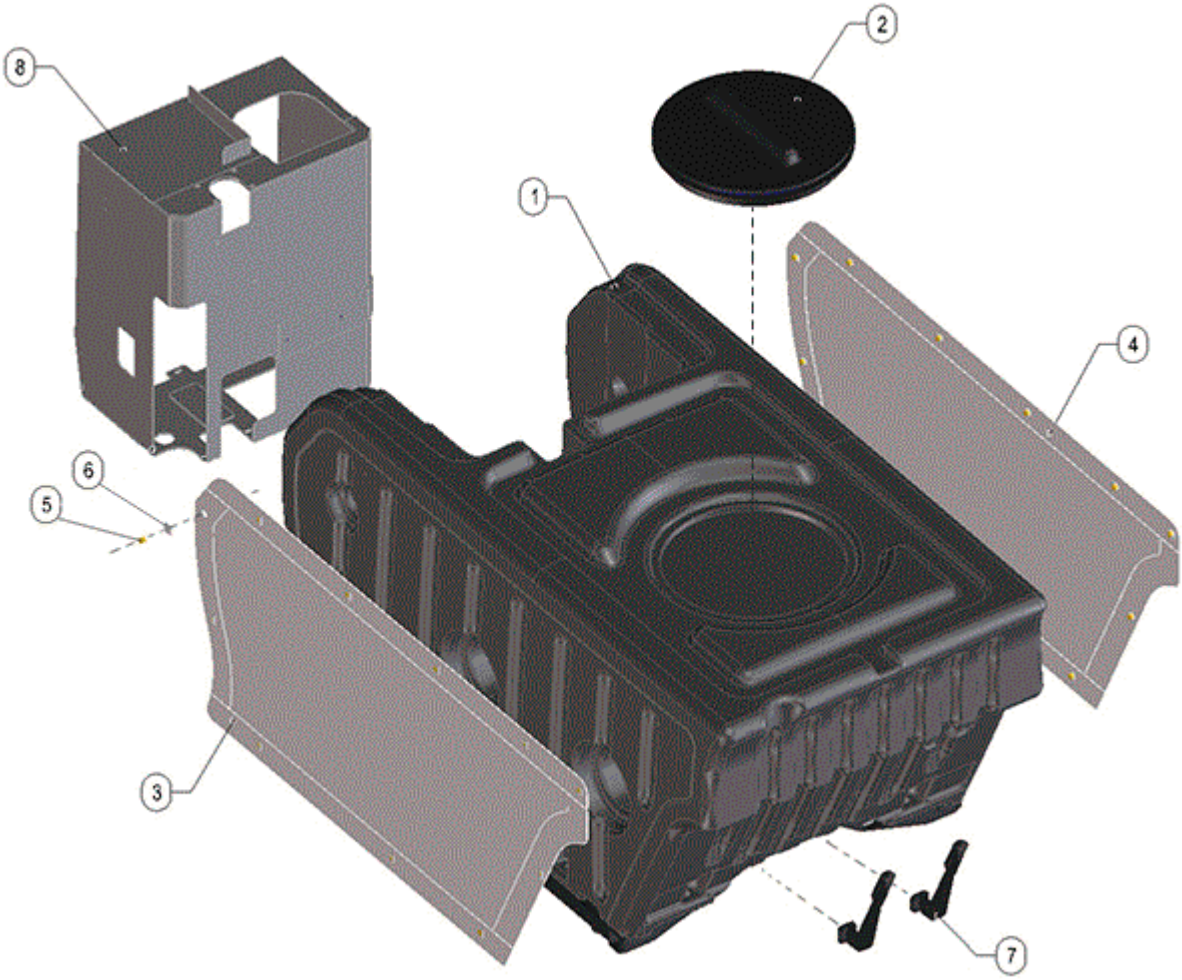

FIGURA	REFERENCIA	DENOMINACIÓN	CANTIDAD
001	48.09801.01	WATER TANK 2000L	1
002	48.09814.00	TOP D620	1
003	48.09802.00	RIGHT TANK COVER	1
004	48.09812.00	LEFT TANK TOP	1
005	618.08016.87	SCREW DIN7991 M8x16 INOX	22
006	48.09813.00	WASHER D30XD8.2	22
007	48.09824.01	SUPPORT FIXING WATER TANK	2
008	48.13917.03	SUPPORT	1

09. MACHINE FUNCTIONS

HOPPER (09)

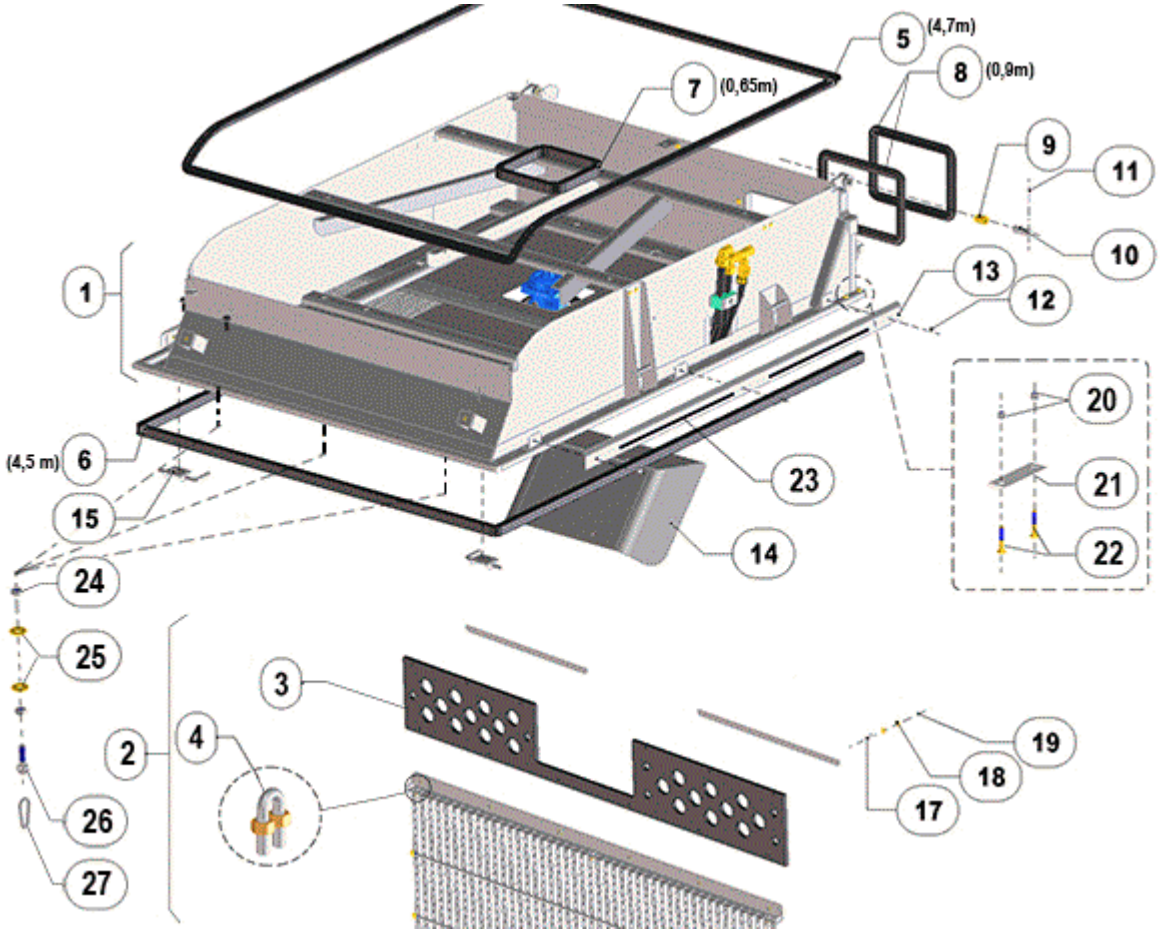

FIGURA	REFERENCIA	DENOMINACIÓN	CANTIDAD
001	48.09374.00	TOP COVER	1
002	48.09397.00	KIT FILTER CHAIN	1
003	48.93970.00	SHEET RUBBER 10X190X1190	1
004	46.09446.00	CLAMP U	3
005	472.00411.02	rubber profile 40X20X2	1
006	477.27020.00	PROFILE RUBBER MATERIAL (TO METERS)	1
007	477.27020.00	PROFILE RUBBER MATERIAL (TO METERS)	1
008	472.00411.00	RUBBER PROFILE MAT.	2
010	48.09313.00	AXIS D20 X 59	2
011	401.04040.60	PIN	2
012	618.06010.87	SCREW DIN7991 M6X10	6
013	48.09009.00	REINFORCING 1400	2
014	48.09370.00	PROTECTIVE PLATE	1
015	48.09025.00	CLOSING SPRING	2
016	48.09013.00	REINFORCING 1X37.5X411.5	4
017	630.06020.87	SCREW ISO 7380 M6X20	6
018	112.06000.67	CIR-CLIP DIN9021 D6	12
019	711.06000.66	NUT DIN982 M6	6

020	711.05000.66	NUT DIN982 M5	4
021	63.08213.00	PROFILE 80X25X5	2
022	618.05030.86	SCREW DIN7991 M5X30	4
023	465.00018.00	ADHESIVE	1
024	701.10000.67	NUT DIN934 M10x1,5	6
025	112.10000.67	WASHER DIN9021 D10	6
026	48.95155.00	JOINT SCREW M10	3
027	957.05050.82	SNAP HOOK	3

09. MACHINE FUNCTIONS

HOPPER (09)

BASTIDOR: 72502

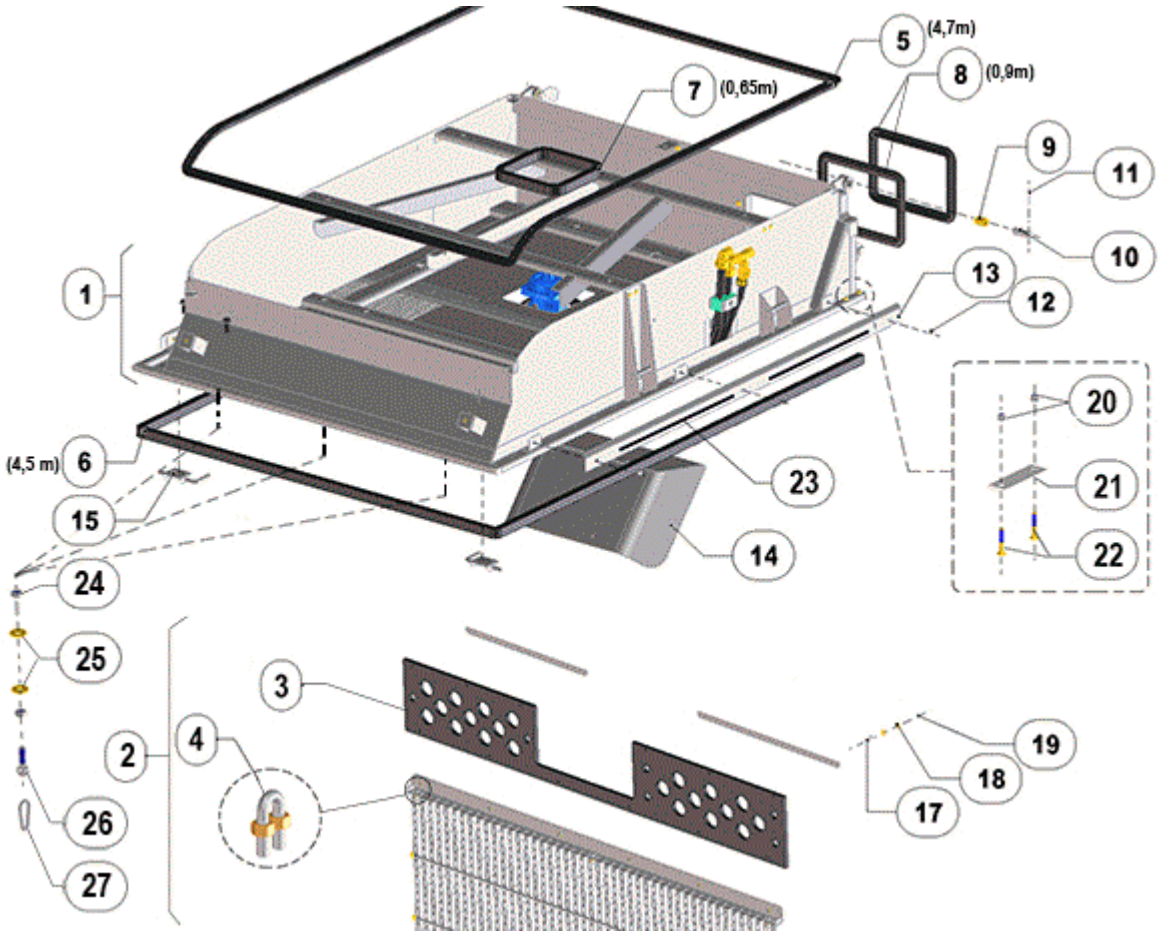

FIGURA	REFERENCIA	DENOMINACIÓN	CANTIDAD
001	48.09374.00	TOP COVER	1
002	48.09397.00	KIT FILTER CHAIN	1
003	48.93970.00	SHEET RUBBER 10X190X1190	1
004	46.09446.00	CLAMP U	3
005	472.00411.03	RUBBER PROFILE	1
006	477.27020.00	PROFILE RUBBER MATERIAL (TO METERS)	1
007	477.27020.00	PROFILE RUBBER MATERIAL (TO METERS)	1
008	472.00411.00	RUBBER PROFILE MAT.	2
010	48.09313.00	AXIS D20 X 59	2
011	401.04040.60	PIN	2
012	618.06010.87	SCREW DIN7991 M6X10	6
013	48.09009.00	REINFORCING 1400	2
014	48.09370.00	PROTECTIVE PLATE	1
015	48.09025.00	CLOSING SPRING	2
016	48.09013.00	REINFORCING 1X37.5X411.5	4
017	630.06020.87	SCREW ISO 7380 M6X20	6
018	112.06000.67	CIR-CLIP DIN9021 D6	12

019	711.06000.66	NUT DIN982 M6	6
020	711.05000.66	NUT DIN982 M5	4
021	63.08213.00	PROFILE 80X25X5	2
022	618.05030.86	SCREW DIN7991 M5X30	4
023	465.00018.00	ADHESIVE	1
024	701.10000.67	NUT DIN934 M10x1,5	6
025	112.10000.67	WASHER DIN9021 D10	6
026	48.95155.00	JOINT SCREW M10	3
027	957.05050.82	SNAP HOOK	3

COMMENTAIRES

MOD. 5541. CAMBIO PERFIL TAPA

09. MACHINE FUNCTIONS

HOPPER (09)

CHÂSSIS: 73017

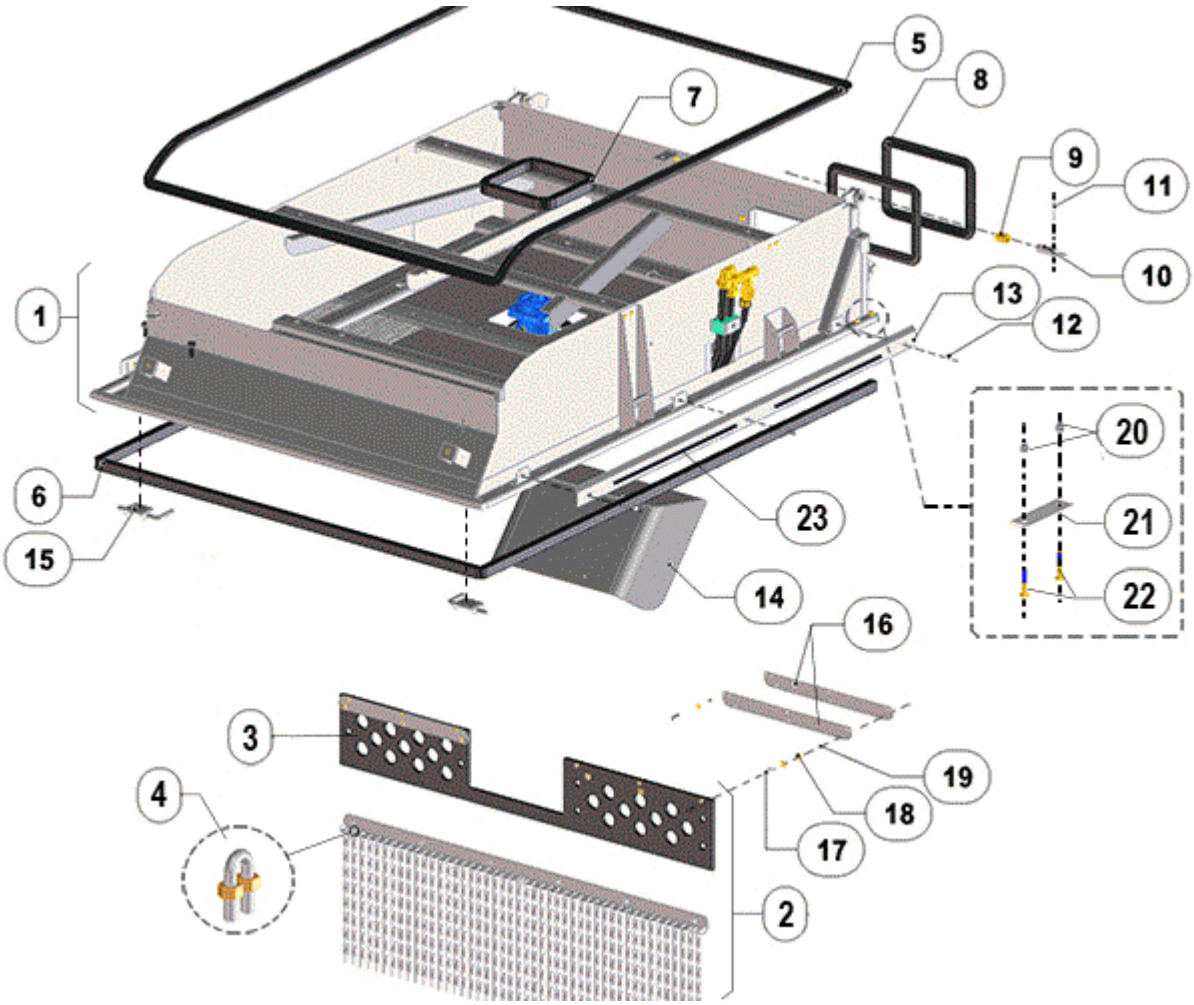

FIGURE	RÉFÉRENCE	NOM	QUANTITÉ
001	48.09374.00	TOP COVER	1
002	48.09397.04	FILTER B200H AND LINK CHAINS	1
004	46.09446.00	CLAMP U	3
005	472.00411.03	RUBBER PROFILE	1
006	477.27020.00	PROFILE RUBBER MATERIAL (TO METERS)	1
007	477.27020.00	PROFILE RUBBER MATERIAL (TO METERS)	1
008	472.00411.00	RUBBER PROFILE MAT.	2
010	48.09313.00	AXIS D20 X 59	2
011	401.04040.60	PIN	2
012	618.06010.87	SCREW DIN7991 M6X10	6
013	48.09009.00	REINFORCING 1400	2
014	48.09370.00	PROTECTIVE PLATE	1
015	48.09025.00	CLOSING SPRING	2
016	48.09013.00	REINFORCING 1X37.5X411.5	4
017	630.06020.87	SCREW ISO 7380 M6X20	6
018	112.06000.67	CIR-CLIP DIN9021 D6	12

019	711.06000.66	NUT DIN982 M6	6
020	711.05000.66	NUT DIN982 M5	4
021	63.08213.00	PROFILE 80X25X5	2
022	618.05030.86	SCREW DIN7991 M5X30	4
023	465.00018.00	ADHESIVE	1

COMMENTAIRES

MOD.5567 ELIMINAR VARILLAS, MOSQUETONES SUJECION CADENAS , Y MEJORAR FIJACION FILTRO CADENAS

09. MACHINE FUNCTIONS

HOPPER (10)

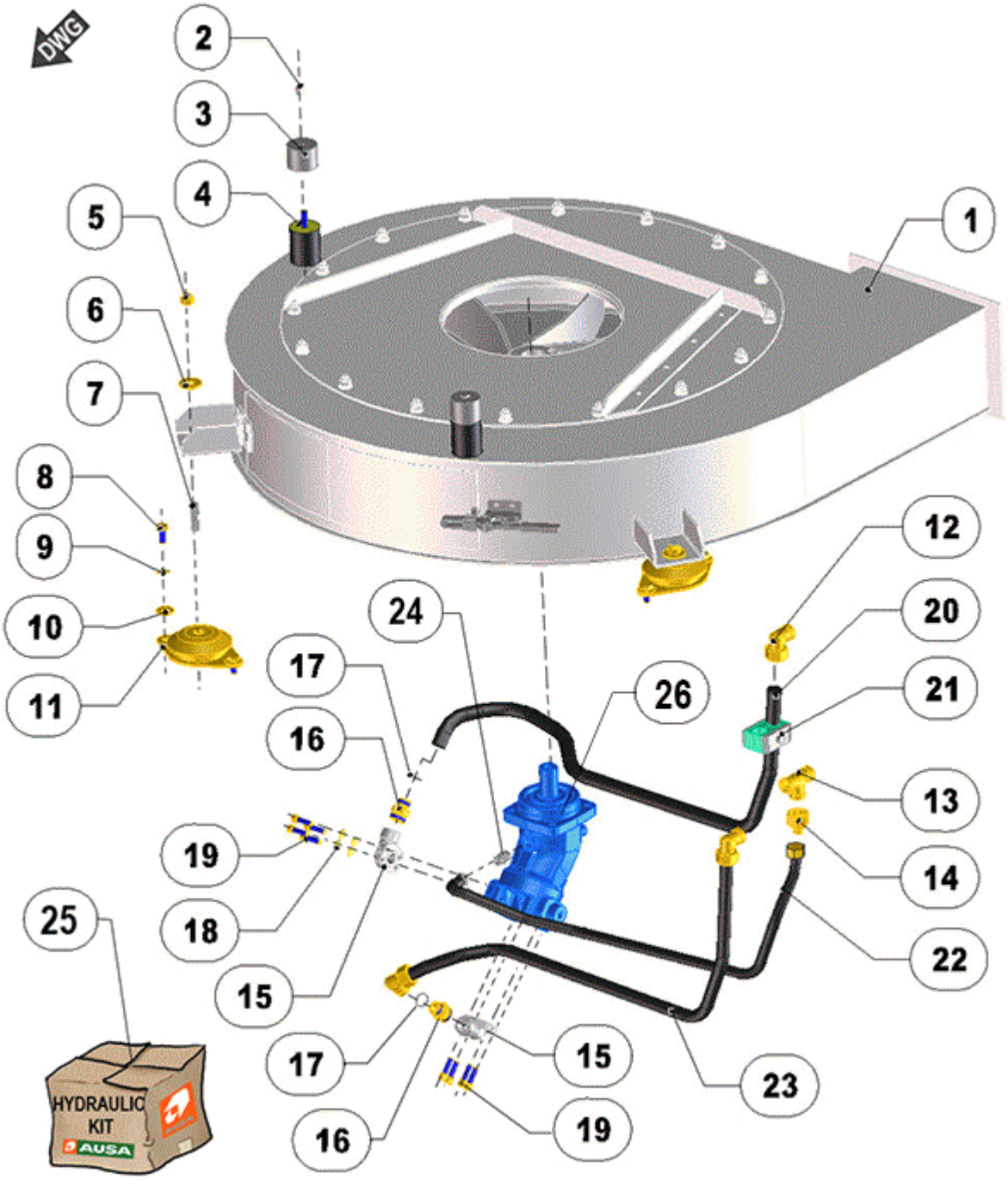

FIGURE	RÉFÉRENCE	NOM	QUANTITÉ
001	48.09309.01	TURBINE B200H	1
002	618.06010.87	SCREW DIN7991 M6X10	2
003	48.13041.00	FIXING SUPPORT SILENTBLOCK D50X3	2
004	08.00107.02	BUTT	2
005	711.12000.66	NUT DIN982 M12	3
006	112.12000.66	WASHER DIN9021 D 12X36	3
007	15.00357.00	STUD DIN939 M12x1,75	3

008	603.10025.87	SCREW DIN933 M10x25	6
009	104.10000.00	WASHER DIN7980 D10	6
010	112.10000.67	WASHER DIN9021 D10	6
011	48.09372.00	SHOCK 37 X 143	3
012	48.10223.00	RACOR C90M/TL -M26X1,5	3
013	48.09391.00	FITTING FORT M/M/M - M26	1
014	48.09392.00	FITTING M/TL - M16 - M26	1
015	48.09393.00	FLANGE SAE6000 C90 H 1/2	2
017	08.00316.00	METALLIC GASKET BUNA D1/2 G	2
018	104.08000.00	WASHER DIN7980 D8	8
019	601.08030.87	SCREW DIN912 M8x30	8
020	48.09387.00	TUBE 5/8 C45M26-TLM26-1100	1
021	46.04298.00	HOSE CLAMP Ø22	1
022	48.09388.00	TUBE R1T1/4 C90TLM16-TLM16X855	1
023	48.09386.00	TUBE 1/2 C45M24-MM24-950	1
024	32.10130.00	GASKET COMPAC. D128X90X4	1
025	48.09395.00	KIT MOTOR HYDRAULIC TURBINE	1
026	46.09180.00	HYDRAULIC TURBINE ENGINE	1

09. MACHINE FUNCTIONS

HOPPER (03)

CHÂSSIS: 75161

FIGURE	RÉFÉRENCE	NOM	QUANTITÉ
001	48.09371.04	COVER PLASTIC HOPPER SWEEPER	1
002	48.09347.00	B200H PROTECTOR	1
003	48.11082.00	WHITE LED LIGHT	3
004	604.08050.86	SCREW DIN931	3
005	711.08000.86	NUT	3
006	630.08025.96	SCREW ISO7380	7
007	104.08000.00	WASHER DIN7980 D8	7
008	112.08000.67	WASHER DIN9021	7
009	615.04020.66	SCREW DIN84	9
010	711.04000.66	NUT	9
011	48.11085.01	MOUNTING BRACKET	1

COMMENTAIRES

MOD.5597(C)

09. MACHINE FUNCTIONS

RIGHT BRUSH (1)

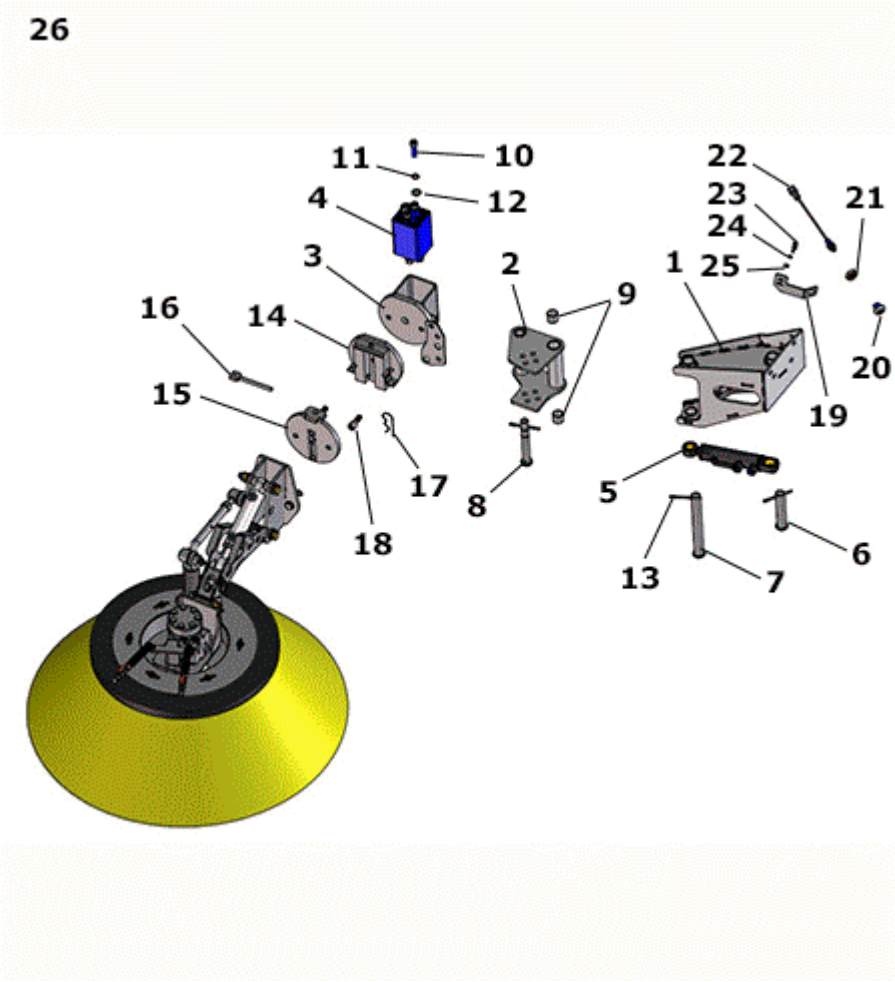

FIGURE	RÉFÉRENCE	NOM	QUANTITÉ
001	48.09603.00	RIGHT BRUSH HOLDER	1
002	48.09605.00	JOINT LEFT BRUSH	1
003	48.09604.01	BRUSH HOLDER MOUNTING BRACKET	1
004	46.95245.00	78X78X130 MECHANICAL FUSE	1
005	48.09190.00	CYLINDER D42X218	1
006	48.09118.00	AXIS D25X120	1
007	48.09461.00	AXIS D25XX212	1
008	48.09450.00	AXIS D20X146	1
009	949.02525.00	CAP. DIN 1494 25X28X25	2
010	601.12040.87	SCREW	8
011	104.12000.00	WASHER DIN7980 D12	8
012	101.12000.67	WASHER DIN 125 D12	8
013	401.06070.60	PIN DIN94 6x70	3
014	48.09621.00	SUPPORT	1
015	48.09622.01	SUPPORT	1
016	48.09623.00	BOLT	1
017	15.00836.00	PIN DIN11024 R4	1

018	601.12030.87	SCREW	2
019	48.11760.00	SENSOR HOLDER	1
020	46.09916.00	PROT. CIL. POSITION SENSOR	1
021	709.18000.67	NUT DIN936 M18x1, 5	1
022	46.11053.00	SENSOR IND.M12 NO PNP,NO PROTE	1
023	603.06020.87	SCREW DIN933 M6x20	2
024	104.06000.00	WASHER DIN7980 D6	2
025	101.06000.67	WASHER DIN125 D6	2
026	48.09601.01	ASSEMBLY RIGHT ARM	1

09. MACHINE FUNCTIONS

RIGHT BRUSH (1)

CHÂSSIS: 71797

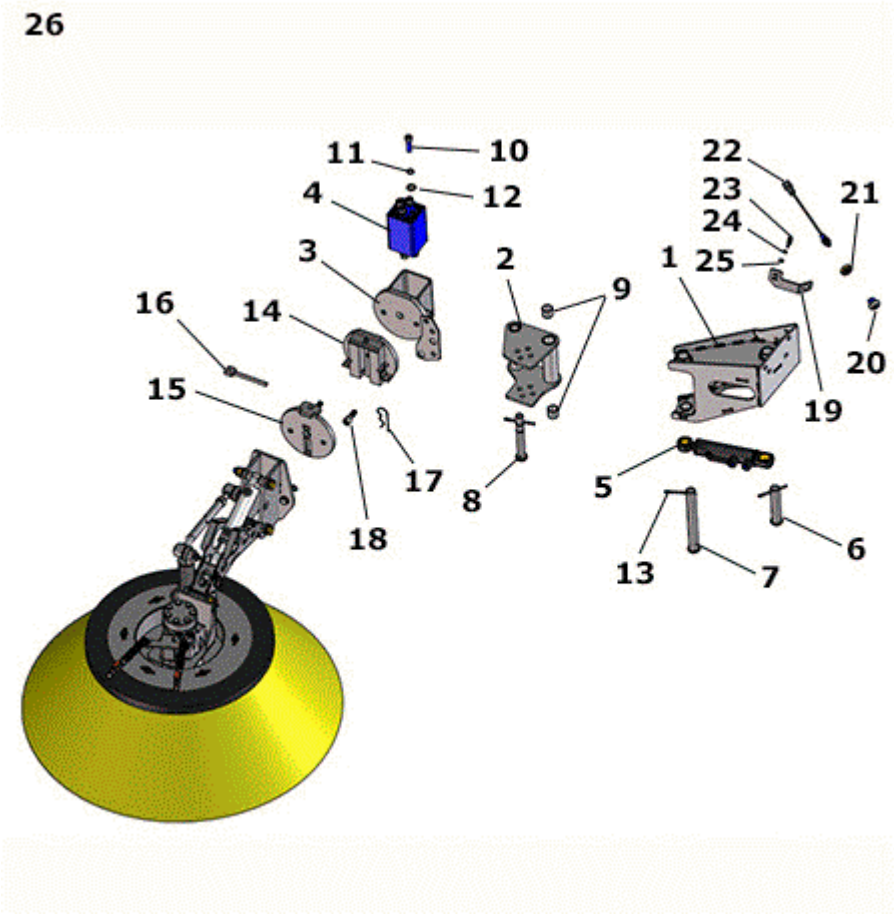

FIGURE	RÉFÉRENCE	NOM	QUANTITÉ
001	48.09603.00	RIGHT BRUSH HOLDER	1
002	48.09605.00	JOINT LEFT BRUSH	1
003	48.09604.01	BRUSH HOLDER MOUNTING BRACKET	1
004	46.95245.00	78X78X130 MECHANICAL FUSE	1
005	48.09190.01	CYLINDER D42X222	1
006	48.09118.00	AXIS D25X120	1
007	48.09461.00	AXIS D25XX212	1
008	48.09450.00	AXIS D20X146	1
009	949.02525.00	CAP. DIN 1494 25X28X25	2
010	601.12040.87	SCREW	8
011	104.12000.00	WASHER DIN7980 D12	8
012	101.12000.67	WASHER DIN 125 D12	8
013	401.06070.60	PIN DIN94 6x70	3
014	48.09621.00	SUPPORT	1
015	48.09622.01	SUPPORT	1
016	48.09623.00	BOLT	1
017	15.00836.00	PIN DIN11024 R4	1

018	601.12030.87	SCREW	2
019	48.11760.00	SENSOR HOLDER	1
020	46.09916.00	PROT. CIL. POSITION SENSOR	1
021	709.18000.67	NUT DIN936 M18x1, 5	1
022	46.11053.00	SENSOR IND.M12 NO PNP,NO PROTE	1
023	603.06020.87	SCREW DIN933 M6x20	2
024	104.06000.00	WASHER DIN7980 D6	2
025	101.06000.67	WASHER DIN125 D6	2
026	48.09601.01	ASSEMBLY RIGHT ARM	1

09. MACHINE FUNCTIONS

RIGHT BRUSH (PART 2)

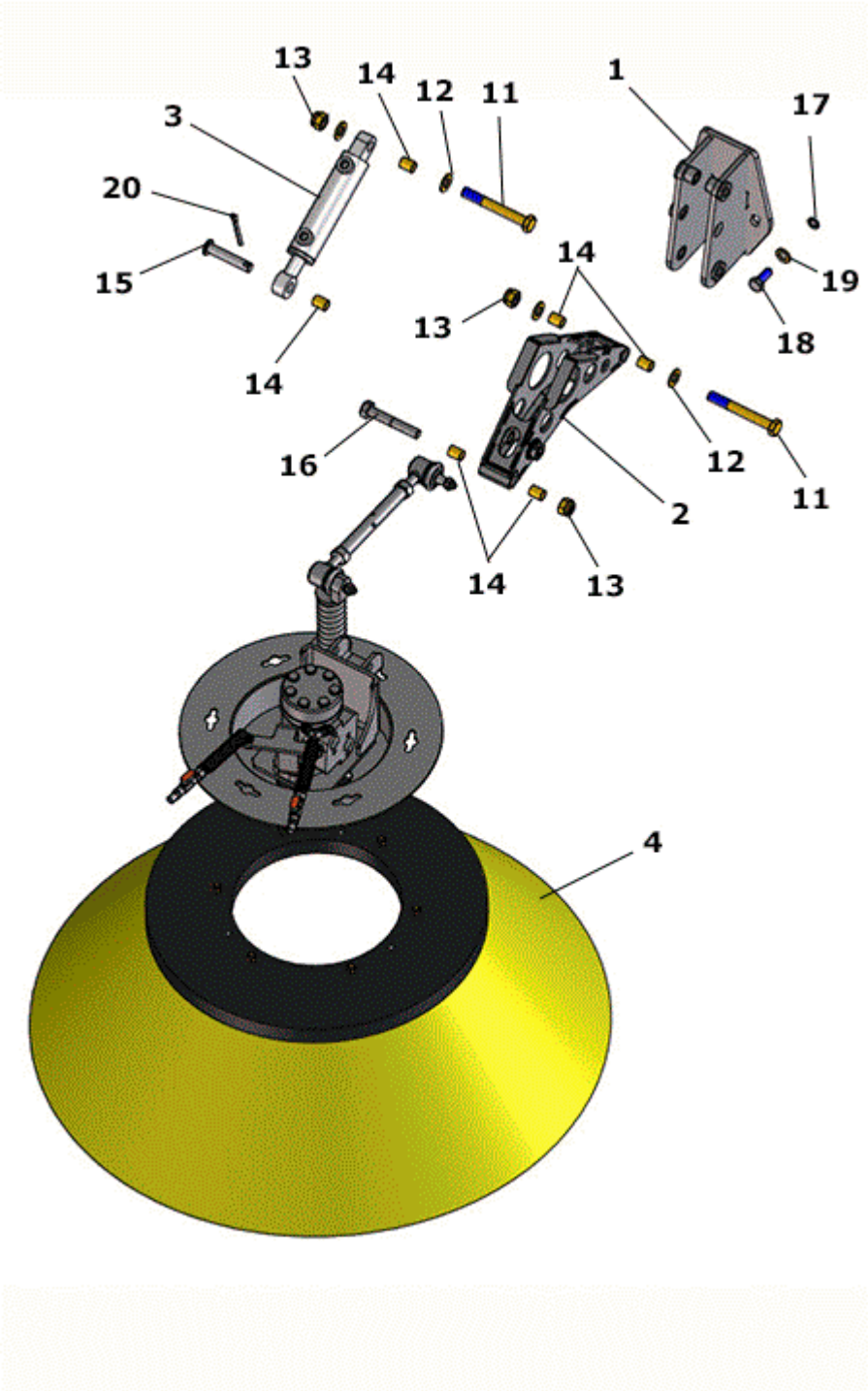

FIGURE	RÉFÉRENCE	NOM	QUANTITÉ
001	48.09607.10	FORK RIGHT SUPPORT	1
002	48.09606.01	ARM. RIGHT BRUSH	1
003	46.95260.00	CyLINDer D/E D40X100	1
011	604.14110.87	SCREW DIN931 M14X110	2
012	101.14000.67	D14 WASHER DIN125	4
013	711.14000.67	NUT DIN982 M14 8.8 K	2
014	949.01420.00	CAP. DIN 1494 14X16X20	6

015	48.09608.00	AXEL D14X76.5	1
016	604.14085.86	SCREW DIN931 M14X85	1
017	104.12000.00	WASHER DIN7980 D12	2
018	603.12030.87	SCREW DIN933 M12x30	2
019	101.12000.67	WASHER DIN 125 D12	2
020	401.06070.60	PIN DIN94 6x70	1

09. MACHINE FUNCTIONS
RIGHT BRUSH (PART 3)

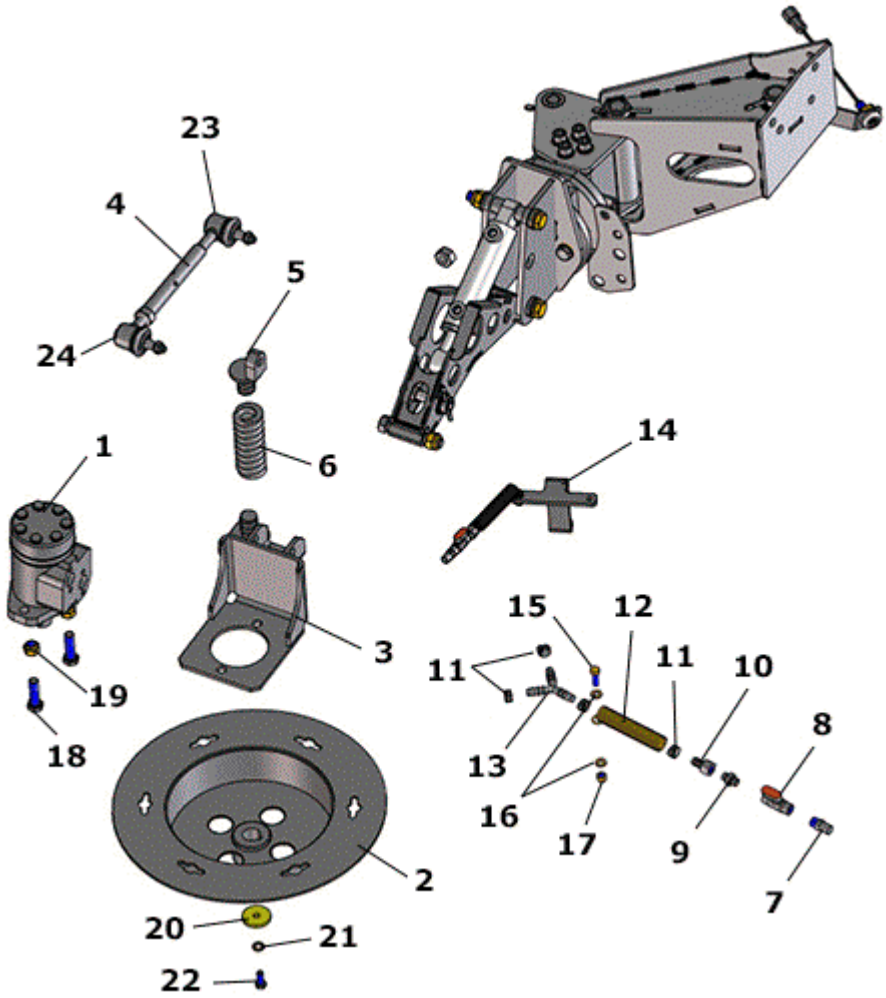

FIGURE	RÉFÉRENCE	NOM	QUANTITÉ
001	48.10200.00	HYDRAULIC MOTOR 160BAR-154CM3/REV	1
002	46.09615.02	D385X101 SUPPORT	1
003	46.95294.01	JOINT SUPPORT PLANE	1
004	46.00618.00	BAR BALL JOINT	1
005	46.95718.01	SUPPORT BAR	1
006	46.95717.02	SPRING COMP. D22XD42	1
007	48.10106.00	RACORD M/M SPRINKLER 1/8-D 0.84	2
008	48.10116.00	BALL VALVE 1 / 8 "FEMALE	2
009	09.00340.00	NIPPLE M/M	2
010	46.10107.00	RACORD M/H D7X1/8	2
011	948.01308.00	SPRING CLAMP Ø13	5
012	46.95191.00	SPRING TRAC. D2XD13.75XD17.75	1
013	46.02199.00	RACOR FORT M/M/M D8XD8XD8	1
014	48.09614.00	SPRINKLER STAND	1
015	603.06020.87	SCREW DIN933 M6x20	2
016	101.06000.67	WASHER DIN125 D6	4

017	711.06000.67	NUT DIN 982 M6	2
018	604.12045.87	SCREW DIN931 M12x45	2
019	711.12000.66	NUT DIN982 M12	2
020	46.95106.00	WASHER 5X9X40 ARM B300	1
021	104.10000.00	WASHER DIN7980 D10	1
022	603.08020.86	SCREW DIN933 M8x20	1
023	01.00630.00	ROTULA DIRECCION IZQUIERDA	1
024	01.00631.00	ROTULA DIRECCION DERECHA	1

09. MACHINE FUNCTIONS

RIGHT BRUSH (PART 3)

CHÂSSIS: 73926

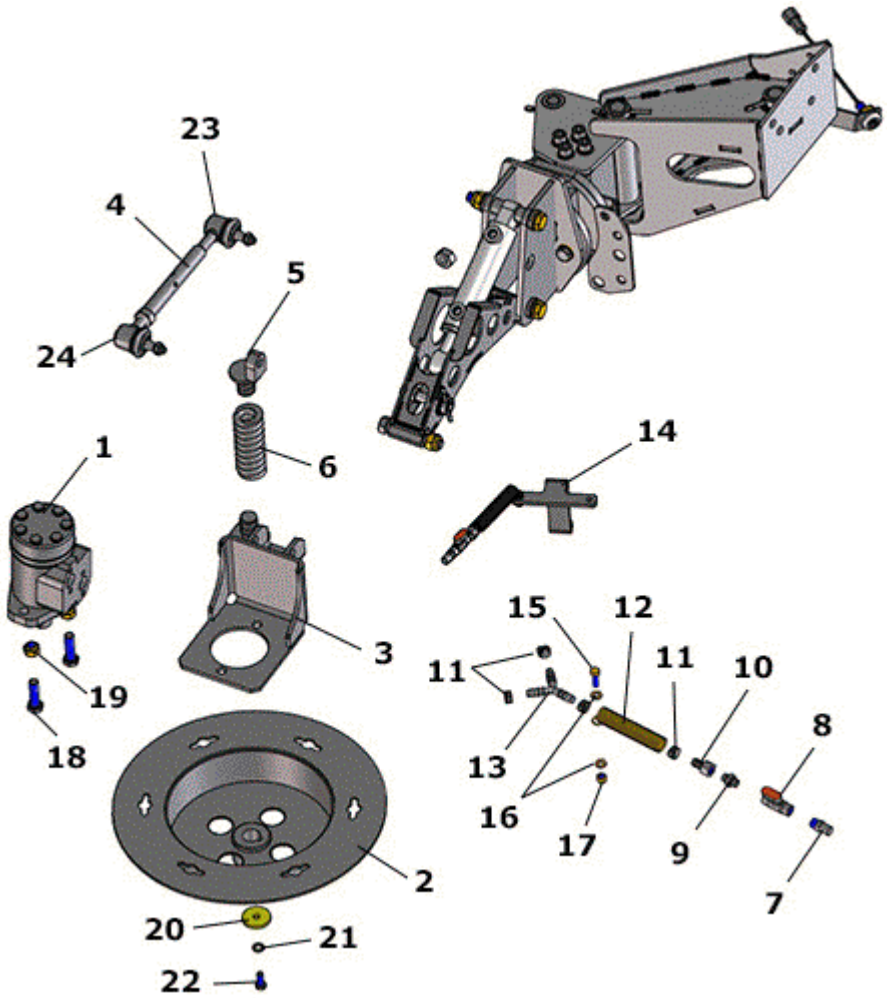

FIGURE	RÉFÉRENCE	NOM	QUANTITÉ
001	48.10200.00	HYDRAULIC MOTOR 160BAR-154CM3/REV	1
002	46.09615.05	REINFORCED SUPPORT FIXATION FOR BRUSH	1
003	46.95294.01	JOINT SUPPORT PLANE	1
004	46.00618.00	BAR BALL JOINT	1
005	46.95718.01	SUPPORT BAR	1
006	46.95717.02	SPRING COMP. D22XD42	1
007	48.10106.00	RACORD M/M SPRINKLER 1/8-D 0.84	2
008	48.10116.00	BALL VALVE 1 / 8 "FEMALE	2
009	09.00340.00	NIPPLE M/M	2
010	46.10107.00	RACORD M/H D7X1/8	2
011	948.01308.00	SPRING CLAMP Ø13	5
012	46.95191.00	SPRING TRAC. D2XD13.75XD17.75	1
013	46.02199.00	RACOR FORT M/M/M D8XD8XD8	1
014	48.09614.00	SPRINKLER STAND	1
015	603.06020.87	SCREW DIN933 M6x20	2
016	101.06000.67	WASHER DIN125 D6	4

017	711.06000.67	NUT DIN 982 M6	2
018	604.12045.87	SCREW DIN931 M12x45	2
019	711.12000.66	NUT DIN982 M12	2
020	46.95106.00	WASHER 5X9X40 ARM B300	1
021	104.10000.00	WASHER DIN7980 D10	1
022	603.08020.86	SCREW DIN933 M8x20	1
023	01.00630.00	ROTULA DIRECCION IZQUIERDA	1
024	01.00631.00	ROTULA DIRECCION DERECHA	1

09. MACHINE FUNCTIONS

LEFT BRUSH (PART 1)

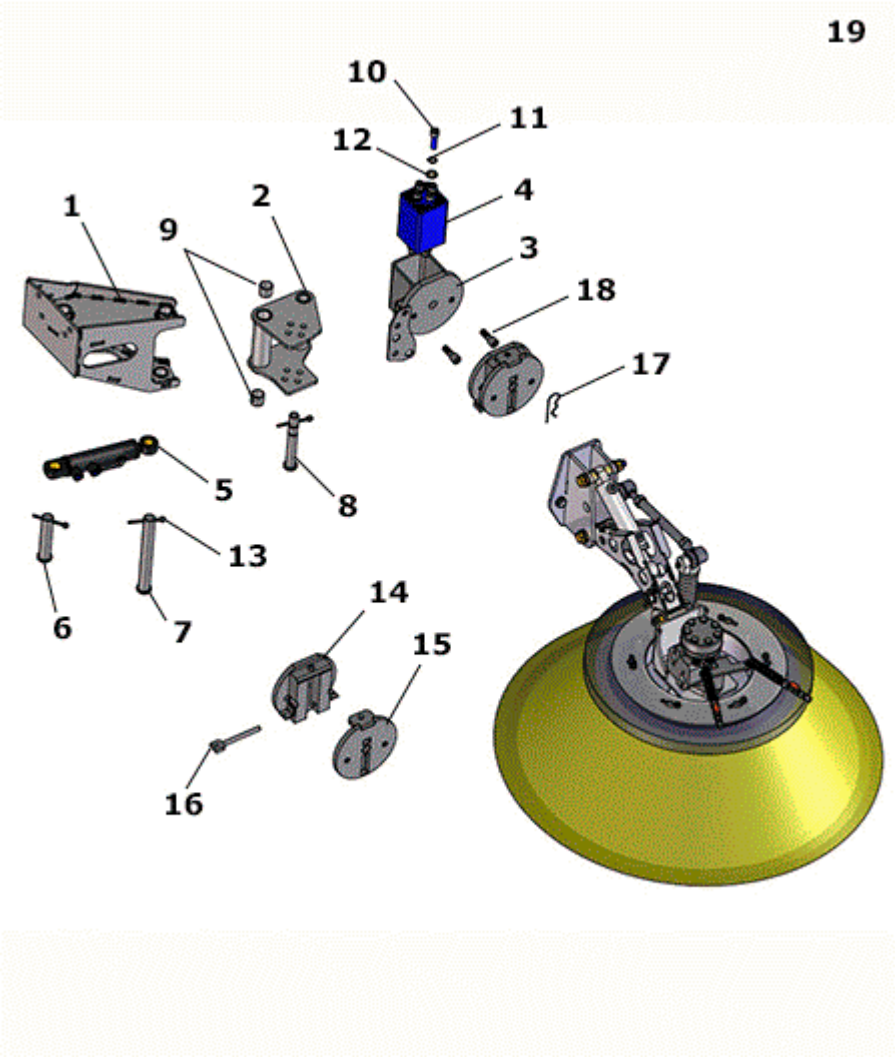

FIGURE	RÉFÉRENCE	NOM	QUANTITÉ
001	48.09609.00	LEFT BRUSH HOLDER	1
002	48.09610.00	JOINT LEFT BRUSH	1
003	48.09604.02	SUPPORT ARM BRUSH	1
004	46.95245.00	78X78X130 MECHANICAL FUSE	1
005	48.09190.00	CYLINDER D42X218	1
006	48.09118.00	AXIS D25X120	1
007	48.09461.00	AXIS D25XX212	1
008	48.09450.00	AXIS D20X146	1
009	949.02525.00	CAP. DIN 1494 25X28X25	2
010	601.12040.87	SCREW	8
011	104.12000.00	WASHER DIN7980 D12	8
012	101.12000.67	WASHER DIN 125 D12	8
013	401.06070.60	PIN DIN94 6x70	3
014	48.09621.00	SUPPORT	1
015	48.09622.01	SUPPORT	1

016	48.09623.00	BOLT	1
017	15.00836.00	PIN DIN11024 R4	1
018	601.12030.87	SCREW	2
019	48.09602.01	LEFT ARM B200H	1

09. MACHINE FUNCTIONS

LEFT BRUSH (PART 1)

CHÂSSIS: 71797

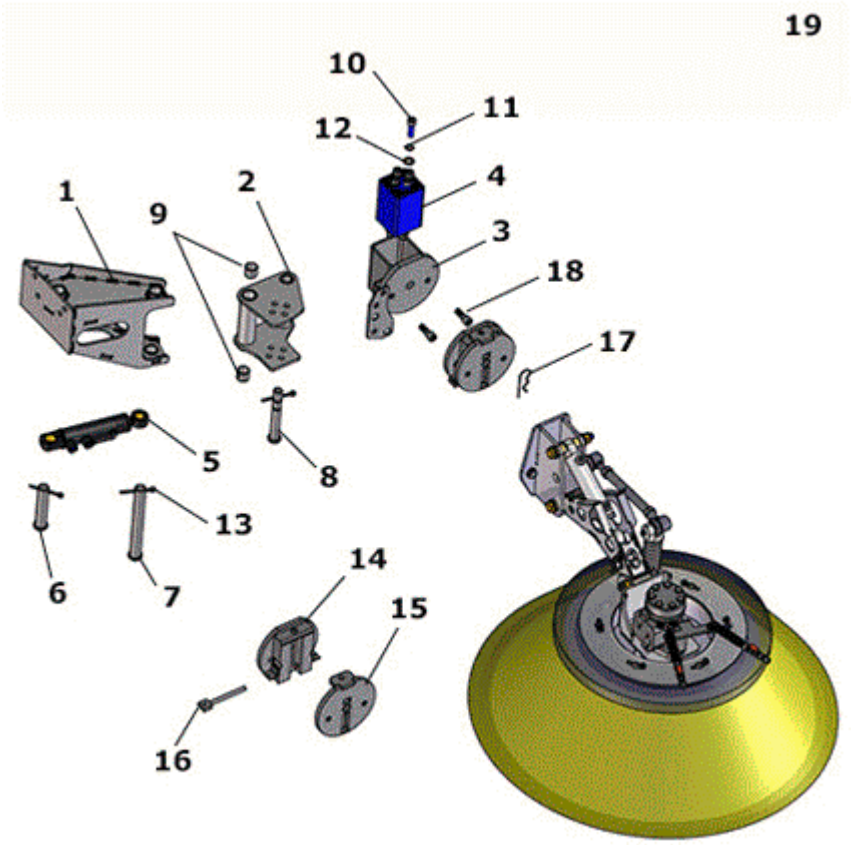

FIGURE	RÉFÉRENCE	NOM	QUANTITÉ
001	48.09609.00	LEFT BRUSH HOLDER	1
002	48.09610.00	JOINT LEFT BRUSH	1
003	48.09604.02	SUPPORT ARM BRUSH	1
004	46.95245.00	78X78X130 MECHANICAL FUSE	1
005	48.09190.01	CYLINDER D42X222	1
006	48.09118.00	AXIS D25X120	1
007	48.09461.00	AXIS D25XX212	1
008	48.09450.00	AXIS D20X146	1
009	949.02525.00	CAP. DIN 1494 25X28X25	2
010	601.12040.87	SCREW	8
011	104.12000.00	WASHER DIN7980 D12	8
012	101.12000.67	WASHER DIN 125 D12	8
013	401.06070.60	PIN DIN94 6x70	3
014	48.09621.00	SUPPORT	1
015	48.09622.01	SUPPORT	1
016	48.09623.00	BOLT	1
017	15.00836.00	PIN DIN11024 R4	1
018	601.12030.87	SCREW	2
019	48.09602.01	LEFT ARM B200H	1

09. MACHINE FUNCTIONS

LEFT BRUSH (PART 2)

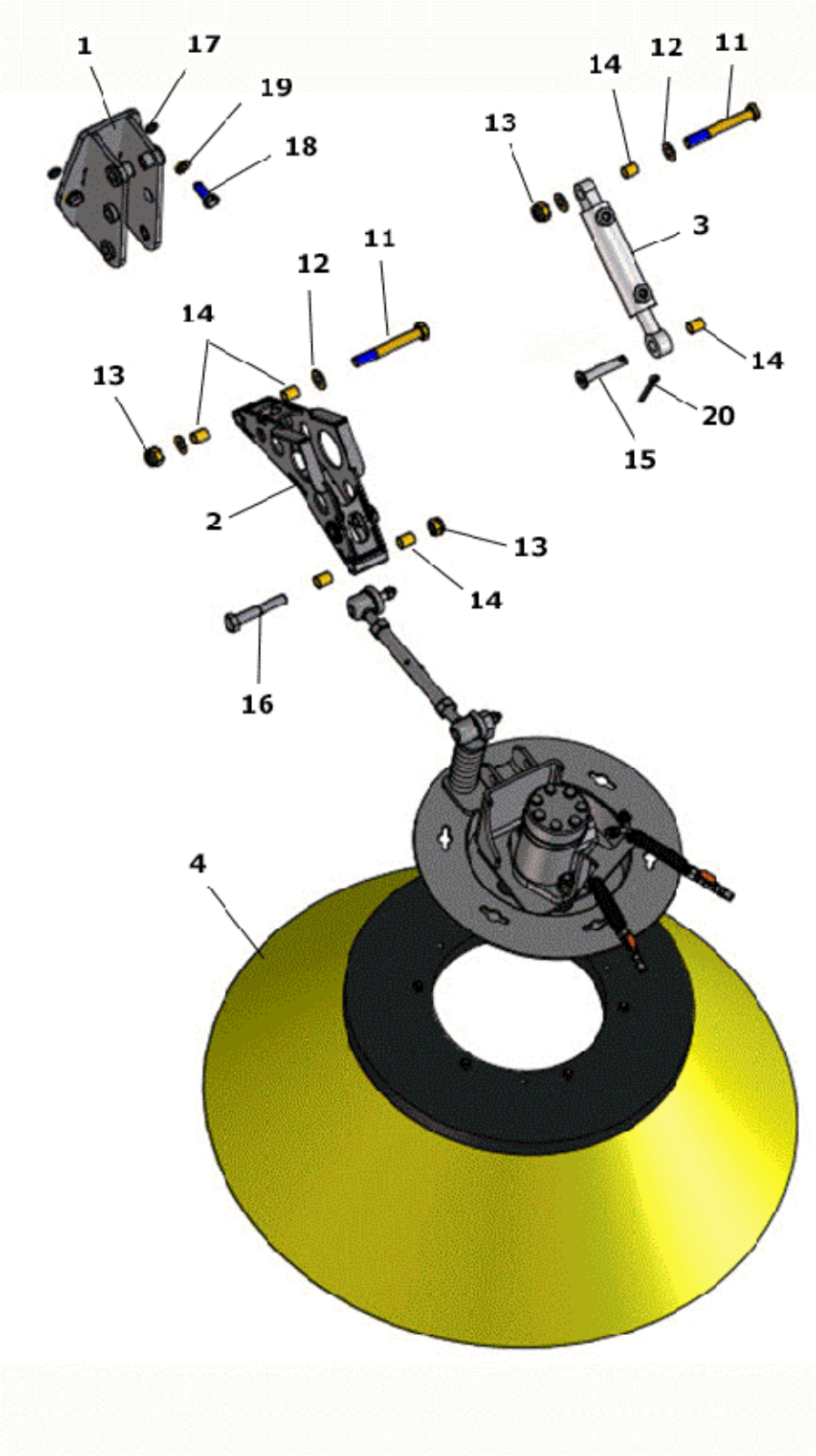

FIGURE	RÉFÉRENCE	NOM	QUANTITÉ
001	48.09612.10	SUPPORT LEFT FORK	1
002	48.09611.01	BRUSH LEFT ARM	1
003	46.95260.00	CyLINDer D/E D40X100	1

004	17.09750.00	BRUSH D850XD500X260	1
011	604.14110.87	SCREW DIN931 M14X110	2
012	101.14000.67	D14 WASHER DIN125	4
013	711.14000.67	NUT DIN982 M14 8.8 K	2
014	949.01420.00	CAP. DIN 1494 14X16X20	6
015	48.09608.00	AXEL D14X76.5	1
016	604.14085.86	SCREW DIN931 M14X85	1
017	104.12000.00	WASHER DIN7980 D12	2
018	603.12030.87	SCREW DIN933 M12x30	2
019	101.12000.67	WASHER DIN 125 D12	2
020	401.06070.60	PIN DIN94 6x70	1

09. MACHINE FUNCTIONS

LEFT BRUSH (PART 3)

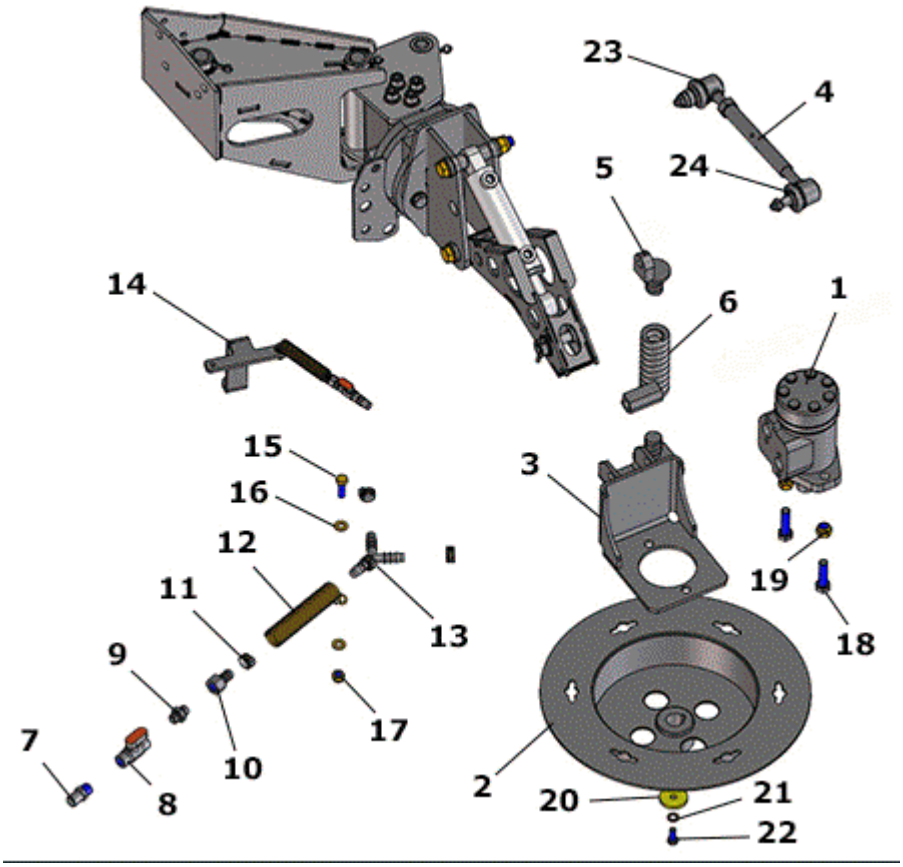

FIGURE	RÉFÉRENCE	NOM	QUANTITÉ
001	48.10200.00	HYDRAULIC MOTOR 160BAR-154CM3/REV	1
002	46.09615.02	D385X101 SUPPORT	1
003	46.95295.01	JOINT SUPPORT PLANE	1
004	46.00618.00	BAR BALL JOINT	1
005	46.95718.01	SUPPORT BAR	1
006	46.95717.02	SPRING COMP. D22XD42	1
007	48.10106.00	RACORD M/M SPRINKLER 1/8-D 0.84	2
008	48.10116.00	BALL VALVE 1 / 8 "FEMALE	2
009	09.00340.00	NIPPLE M/M	2
010	46.10107.00	RACORD M/H D7X1/8	2
011	948.01308.00	SPRING CLAMP Ø13	5
012	46.95191.00	SPRING TRAC. D2XD13.75XD17.75	1
013	46.02199.00	RACOR FORT M/M/M D8XD8XD8	1
014	48.09614.00	SPRINKLER STAND	1
015	603.06020.87	SCREW DIN933 M6x20	2
016	101.06000.67	WASHER DIN125 D6	4
017	711.06000.67	NUT DIN 982 M6	2
018	603.12045.86	SCREW DIN933	2
019	711.12000.66	NUT DIN982 M12	2

020	46.95106.00	WASHER 5X9X40 ARM B300	1
021	104.10000.00	WASHER DIN7980 D10	1
022	603.08020.86	SCREW DIN933 M8x20	1
023	01.00630.00	ROTULA DIRECCION IZQUIERDA	1
024	01.00631.00	ROTULA DIRECCION DERECHA	1

09. MACHINE FUNCTIONS

LEFT BRUSH (PART 3)

CHASSIS: 73926

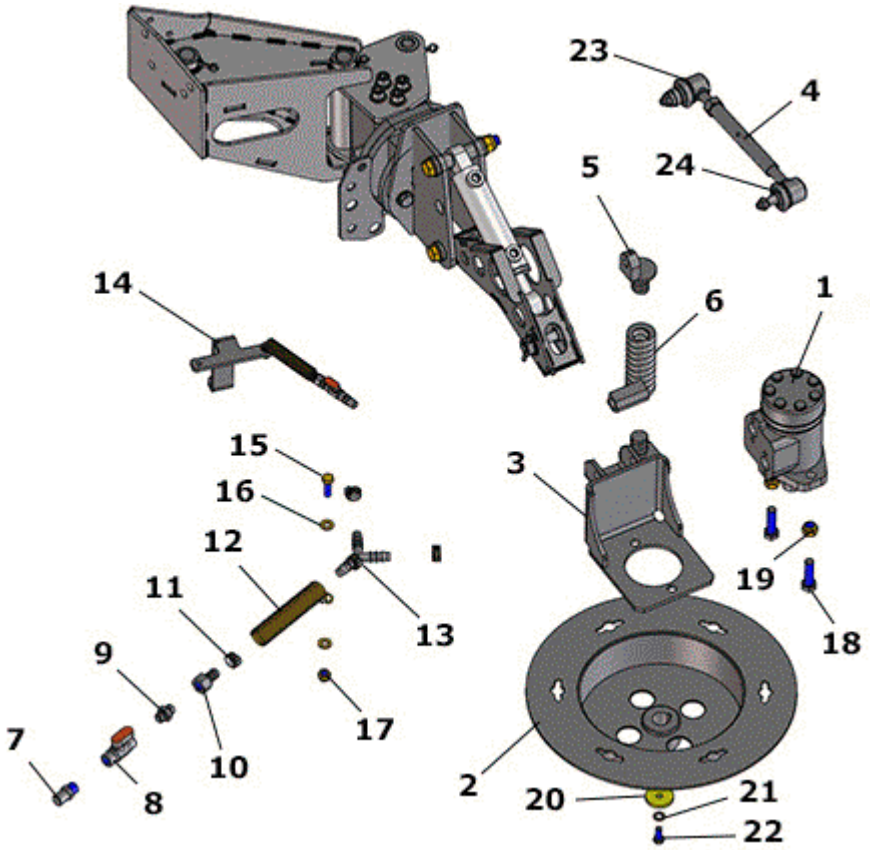

FIGURE	REFERENCE	DENOMINATION	AMOUNT
001	48.10200.00	HYDRAULIC MOTOR 160BAR-154CM3/REV	1
002	46.09615.05	REINFORCED SUPPORT FIXATION FOR BRUSH	1
003	46.95295.01	JOINT SUPPORT PLANE	1
004	46.00618.00	BAR BALL JOINT	1
005	46.95718.01	SUPPORT BAR	1
006	46.95717.02	SPRING COMP. D22XD42	1
007	48.10106.00	RACORD M/M SPRINKLER 1/8-D 0.84	2
008	48.10116.00	BALL VALVE 1 / 8 "FEMALE	2
009	09.00340.00	NIPPLE M/M	2
010	46.10107.00	RACORD M/H D7X1/8	2
011	948.01308.00	SPRING CLAMP Ø13	5
012	46.95191.00	SPRING TRAC. D2XD13.75XD17.75	1
013	46.02199.00	RACOR FORT M/M/M D8XD8XD8	1
014	48.09614.00	SPRINKLER STAND	1
015	603.06020.87	SCREW DIN933 M6x20	2
016	101.06000.67	WASHER DIN125 D6	4
017	711.06000.67	NUT DIN 982 M6	2
018	603.12045.86	SCREW DIN933	2
019	711.12000.66	NUT DIN982 M12	2

020	46.95106.00	WASHER 5X9X40 ARM B300	1
021	104.10000.00	WASHER DIN7980 D10	1
022	603.08020.86	SCREW DIN933 M8x20	1
023	01.00630.00	ROTULA DIRECCION IZQUIERDA	1
024	01.00631.00	ROTULA DIRECCION DERECHA	1

11. ELECTRIC INSTALLATION

ELECTRICAL CONNECTION (GENERAL SECTION)

CHASSIS: 69955

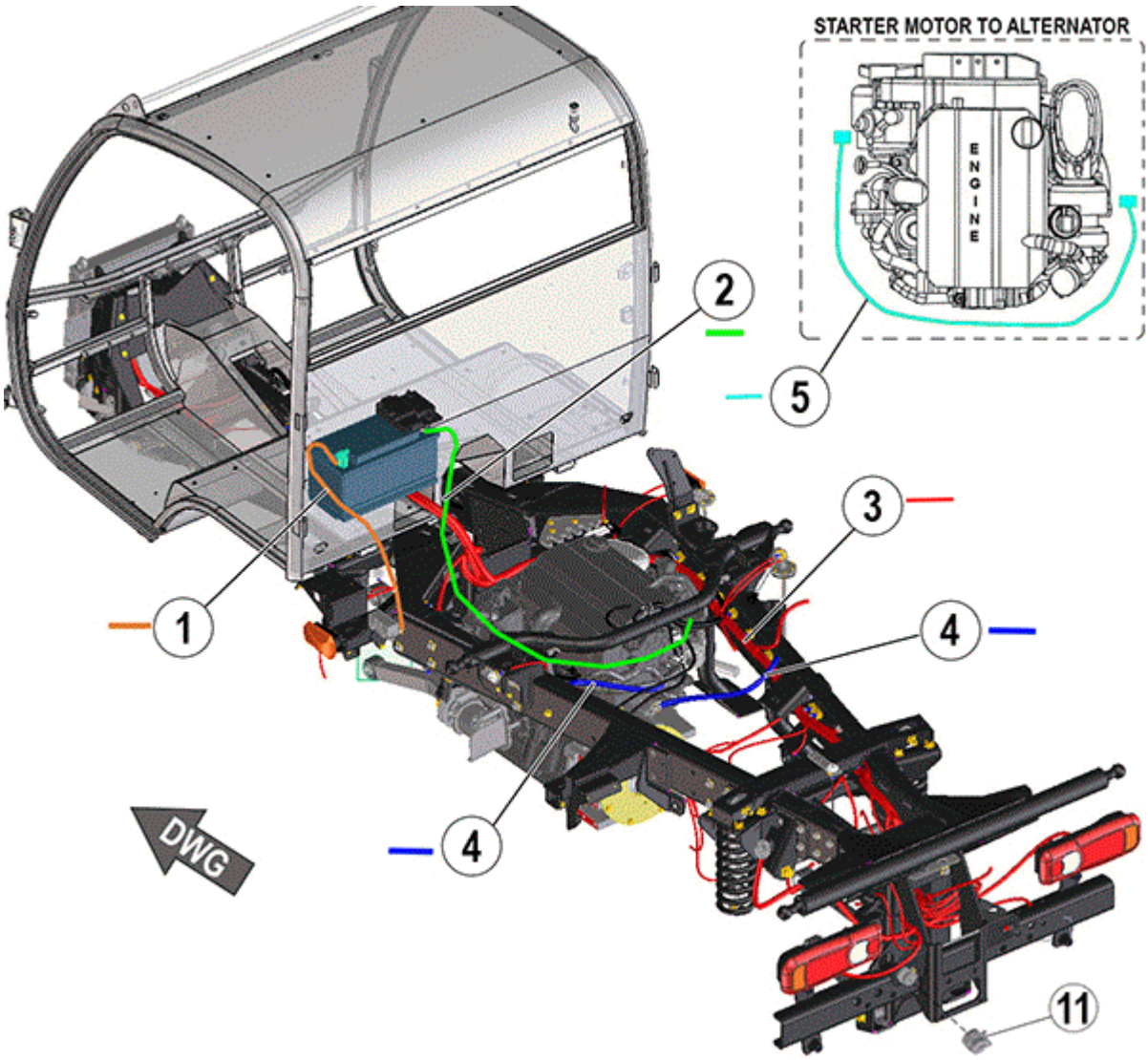

FIGURE	REFERENCE	DENOMINATION	AMOUNT
001	48.11019.00	ELECTRIC CABLE NEGATIVE D35 X 700MM	1
002	48.11058.00	POSITIVE ELECTRICAL CABLE 35X1750	1
003	48.11001.03	SECTION I / E GENERAL CHASSIS	1
004	17.11009.00	CABLE ELEC. 35X600 NEG	2
005	46.11048.00	ELECTRICAL CABLE 16X1200 POSITIVE	1
011	48.11077.00	CONNECTOR CAP DEUTSCH HDP 18	1

COMMENTS

MOD.5334 Cambió botón paro emergancia. Creado conjunto para recambio 48.11096RE00

11. ELECTRIC INSTALLATION

TOP DASHBOARD

CHASSIS: 71901

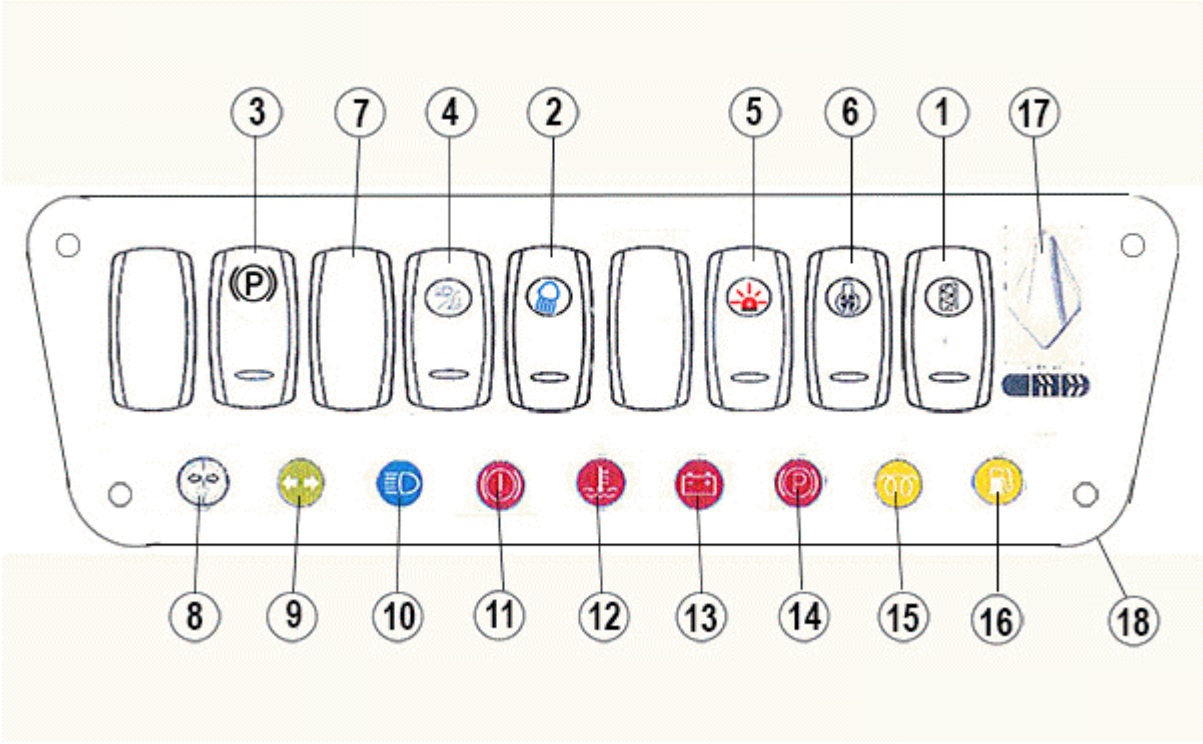

FIGURE	REFERENCE	DENOMINATION	AMOUNT
001A	48.11507.00	THERMAL SWITCH MIRROR COVER	1
001B	48.11550.00	1P OFF-ON SWITCH	1
002A	48.11503.00	WORK LIGHT SWITCH COVER LOWER	1
002B	48.11550.00	1P OFF-ON SWITCH	1
003A	48.11531.00	NEGATIVE BRAKE SWITCH COVER	1
003B	48.11559.00	SWITCH 1P ON-ON	1
004A	48.11530.00	LIGHT SWITCH COVER UP / DOWN	1
004B	48.11550.00	1P OFF-ON SWITCH	1
005A	48.11505.00	ROTARY LIGHT SWITCH COVER	1
005B	48.11550.00	1P OFF-ON SWITCH	1
006A	48.11506.00	THERMAL SWITCH MIRROR COVER	1
006B	48.11551.00	PUSH OFF-(ON) 1P	1
007	48.11501.00	CARLING CONTURA V TOP	4
008	48.11301.00	FAULT WARNING LIGHT FLASHER	1
009	IM.20107.00	INTERMITTENT LIGHT INDICATOR	1
010	IM.20112.00	BEAM LIGHTS INDICATOR	1
011	IM.30021.00	BRAKE FAILURE INDICATOR	1
012	IM.20108.00	WATER TEMPERATURE INDICATOR	1
013	IM.20110.00	GENERATOR INDICATOR	1
014	IM.30026.00	PARKING BRAKE INDICATOR	1
015	IM.20110.00	GENERATOR INDICATOR	1

016	IM.20116.00	LUZ TESTIGO NIVEL COMB.	1
017	32.11141.01	SWITCH DIRECTION WITHOUT FRAME	1

11. ELECTRIC INSTALLATION

FRONT WORK LIGHTS

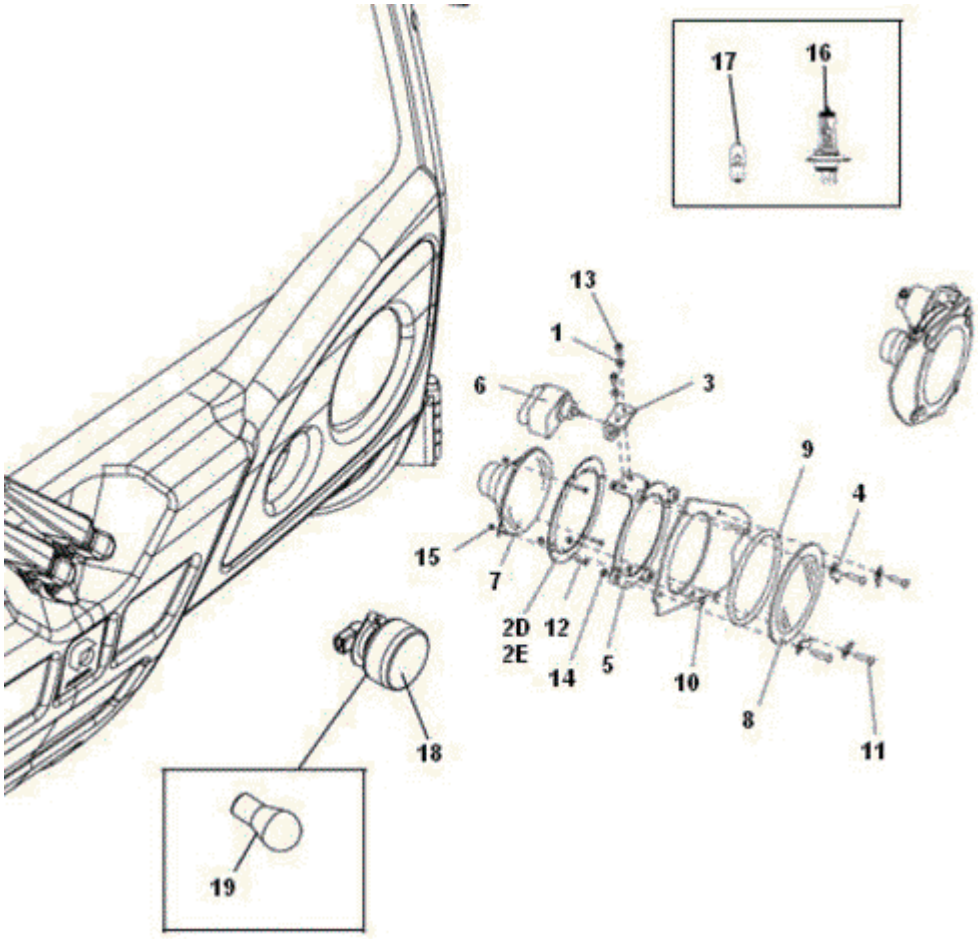

FIGURE	REFERENCE	DENOMINATION	AMOUNT
001	101.06000.67	WASHER DIN125 D6	4
002D	46.08731.00	INNER RIGHT BEACON FIXING	1
002E	46.08734.00	LEFT INNER FIXING BEACON	1
003	46.08732.00	BEACON MOTOR FIXING	2
004	46.08875.00	HEADLIGHT GLASS FIXING SUPPORT	8
005	46.11077.01	HEADLIGHT EXTERNAL FIXING SUPPORT	2
006	46.82009.00	BEACONS LIFT REGULATION ENGINE	2
007	46.82010.00	LOWER DRIVING BEACON	2
008	46.11079.01	HEADLIGHT PROTECTOR. CABIN	2
009	465.00019.00	BUTYL RUBBER ADHESIVE SEALANT 8MM	2
010	46.08733.00	BOLT DIN7985 5x25	6
011	46.08711.00	SCREW DIN7985 M6x25	8
012	603.04020.87	SCREW DIN 933 M4X20	6
013	601.06015.87	SCREW. DIN 912 M6x15	4
014	720.05000.66	NUT DIN985 M5	6
015	720.04000.66	NUT DIN985 M4	6
016	48.11065.00	LIGHT BULB H4 12V 60 / 55W	1

017	48.11066.00	LAMP T4W 12V 4W	1
018	46.11203.00		1
019	31.01329.01	LAMP 12V 21W AMBER	1

13. ACCESSORIES

AIR CONDITIONING (1)

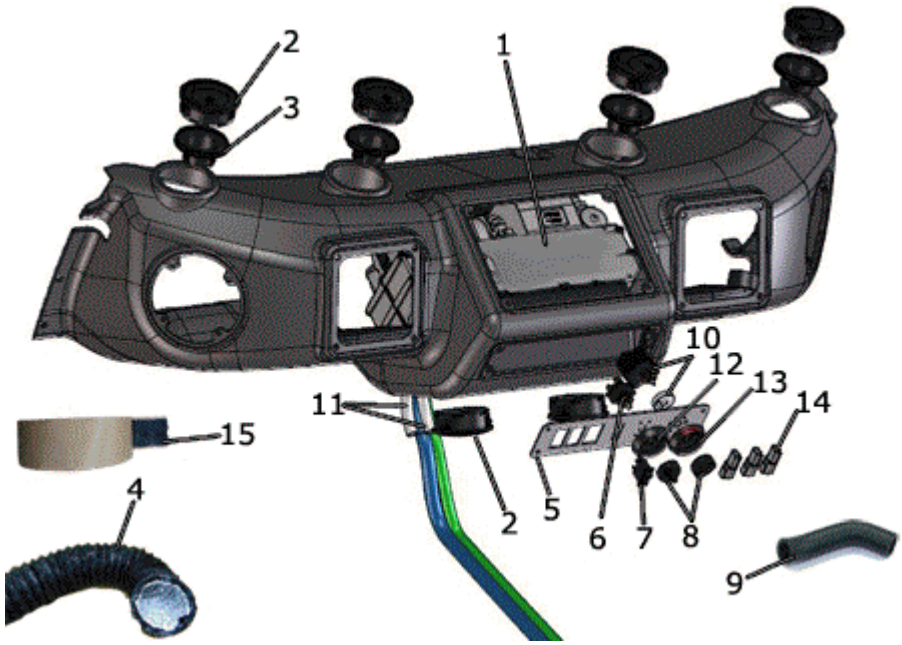

FIGURE	REFERENCE	DENOMINATION	AMOUNT
001	32.08416.00	EVAPORATOR A/C	1
002	48.08292.00	ADJUSTABLE AIR DIFFUSER D84	6
003	48.08293.00	ORIENT AIR DIFFUSER. D84-D45	4
004	487.00045.00	MAT. TUBE-ALU-PAPER PAPER D45	1
005	48.08104.02	BUTTON PLATE LIGHT / CAL.	1
006	32.08429.00	SWITCH 4 POS. VENT.	1
007	32.08425.00	SWITCH A / C ON-OFF	1
008	32.08427.00	ROTARY CONTROL D33	1
009	48.08297.00	HEATING TUBE	1
010	48.11560.00	SWITCH REG. TEMPERATURE	1
011	469.12018.00	TUBE	2
012	32.08426.00	CONTROL COVER VENT.	1
013	48.08296.00	TRIM CONTROL	1
014	46.11033.00		3
015	488.00050.00	ASPHALT CLOTH	1

13. ACCESSORIES
AIR CONDITIONING (2)

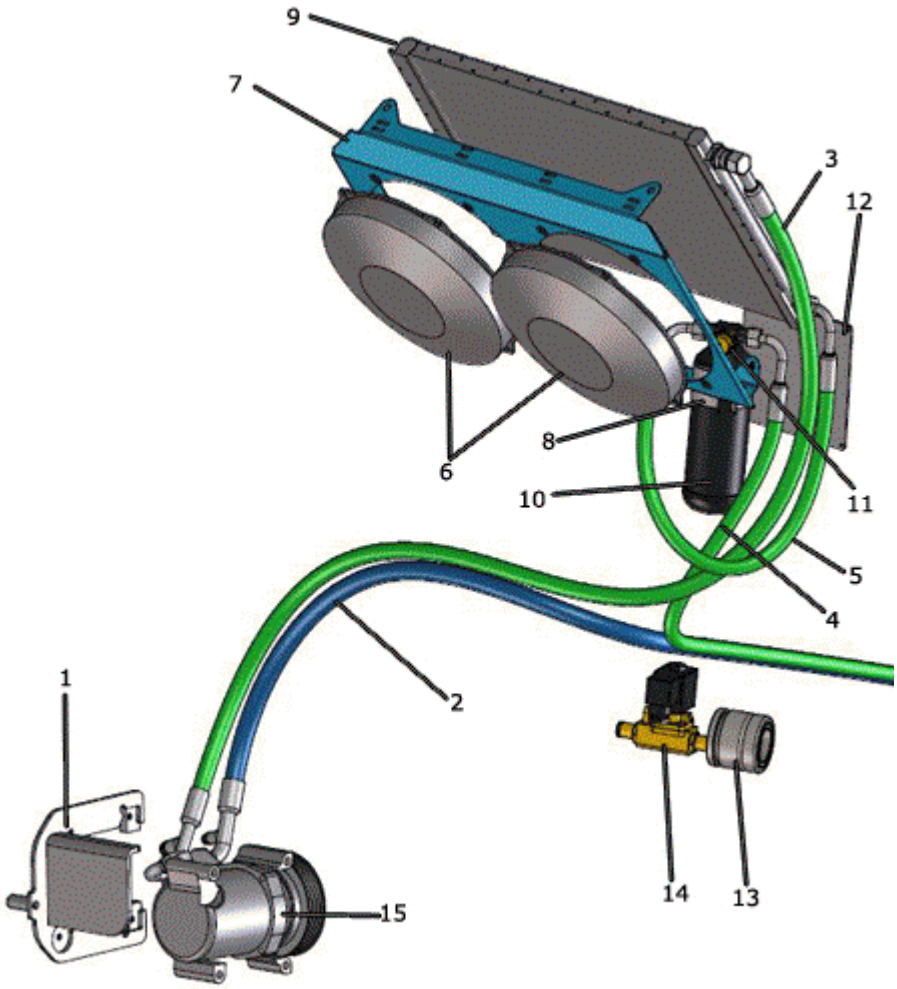

FIGURE	REFERENCE	DENOMINATION	AMOUNT
001	46.02709.03	MOUNTING BRACKET A / C COMPRESSOR	1
002	48.13214.00		1
003	48.13211.01	TUBE A / C C90-C90X1520	1
004	48.13213.00		1
005	48.13212.01	TUBE A / C C90-C90 5/16	1
006	48.10761.00	FAN A / C	2
007	48.13205.00	SUPPORT FIXING FANS	1
009	48.13201.01	CONDENSER RADIATOR 6KW	1
010	32.08409.00	FILTER DRIER D6	1
011	32.08410.00	PRESSOSTAT SWITCH	1
012	48.13218.00	PLATE 140X158X2 MM	6
013	46.13302.00	GAS CYLINDER AIR CONDITIONING	1
014	48.11562.00	ELECTROVALVE 18W	1
015	46.02701.01	COMPRESSOR A/A	1

13. ACCESSORIES

VIEW CAMERA

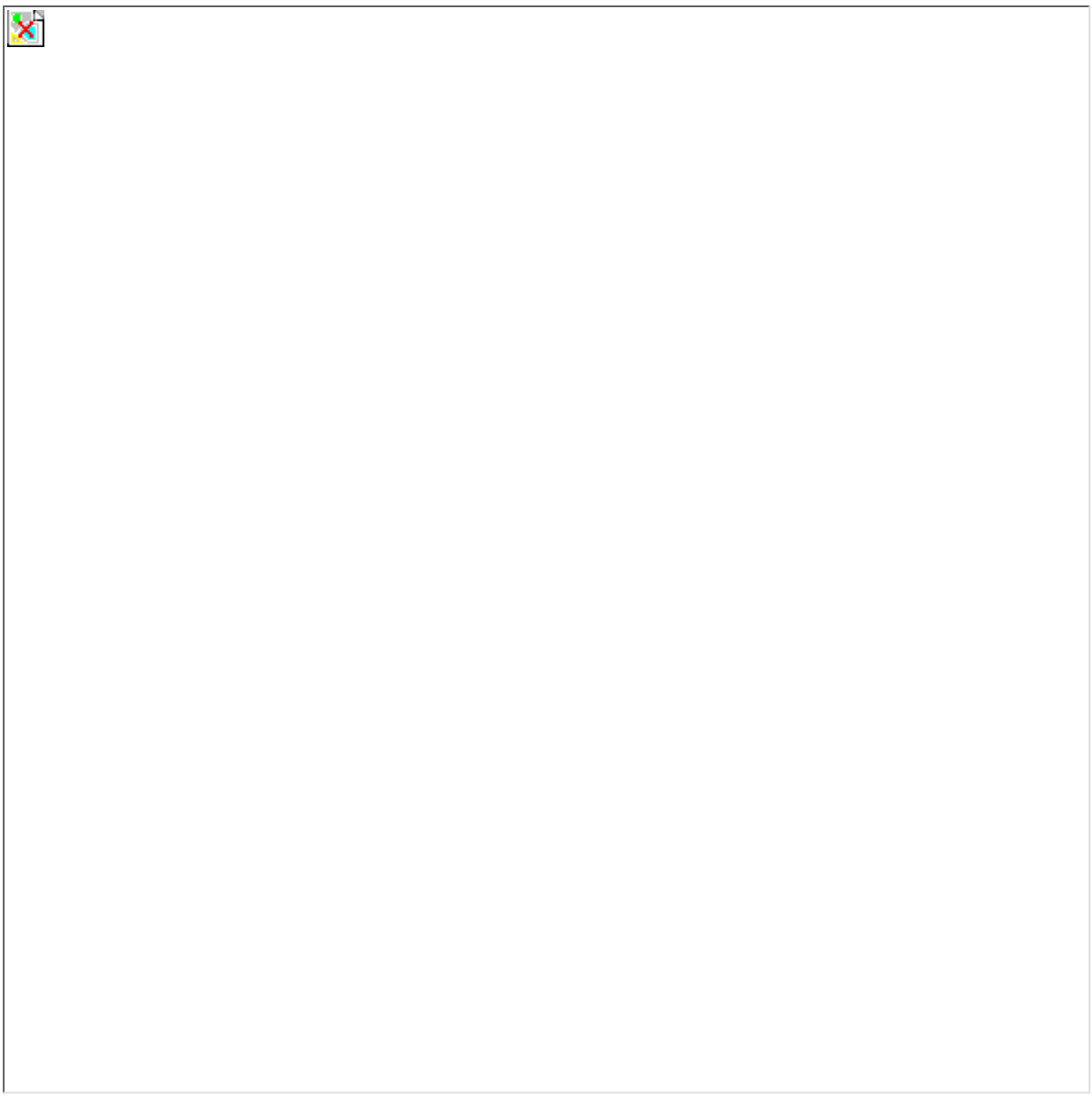

FIGURE	REFERENCE	DENOMINATION	AMOUNT
001	48.11072.00	COLOR CAMERA 70X44X54MM IP67	1
002	48.11071.00	5 METER EXTENSION WIRE FOR CAMERA	1
003	48.11070.00	COUPLING CAMERA WIRE	1

OPTION AND VARIANTS
DISASSEMBLY TOOL

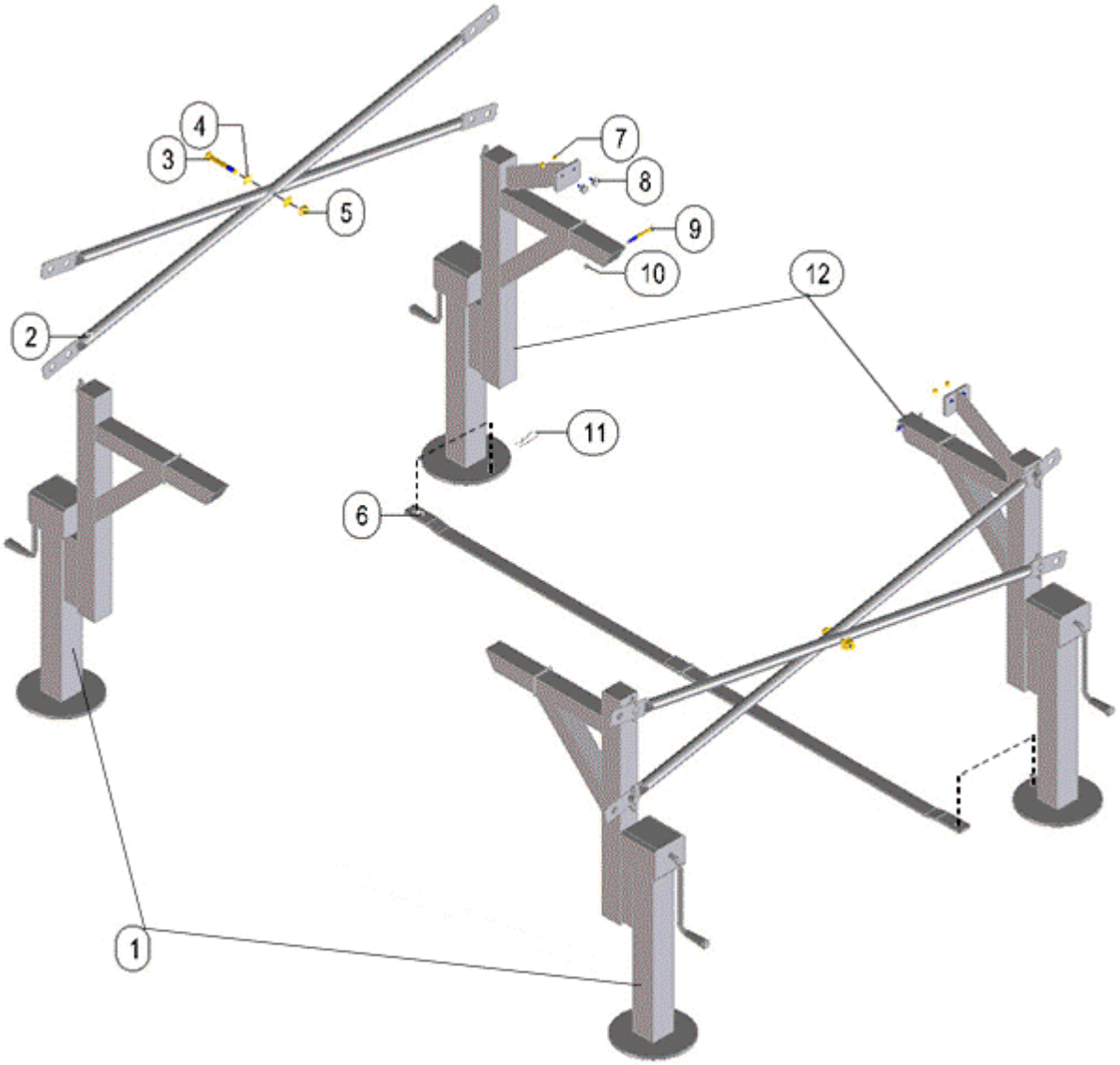

FIGURE	REFERENCE	DENOMINATION	AMOUNT
001	48.97085.00	LEG SUPORT MWB200H	2
002	48.09786.00	FIX ROD D30X1.5	4
003	604.12090.87	SCREW DIN931 M12X90	2
004	101.12000.67	WASHER DIN 125 D12	4
005	711.12000.66	NUT DIN982 M12	2
006	48.97086.00	LEGS SUPPORT FIXATION 1926X40X10	1
007	711.06000.66	NUT DIN982 M6	4
008	60.01926.00	RUBBER TOP 20X8.5 M6X165	4
009	604.08080.87	SCREW M8x80 DIN931	2
010	711.08000.66	NUT DIN982 M8	2
011	15.00836.00	PIN DIN11024 R4	2
012	48.97085.02	LEG SUPORT B200H	2

OPTION AND VARIANTS

THIRD BRUSH

CHASSIS: 71236

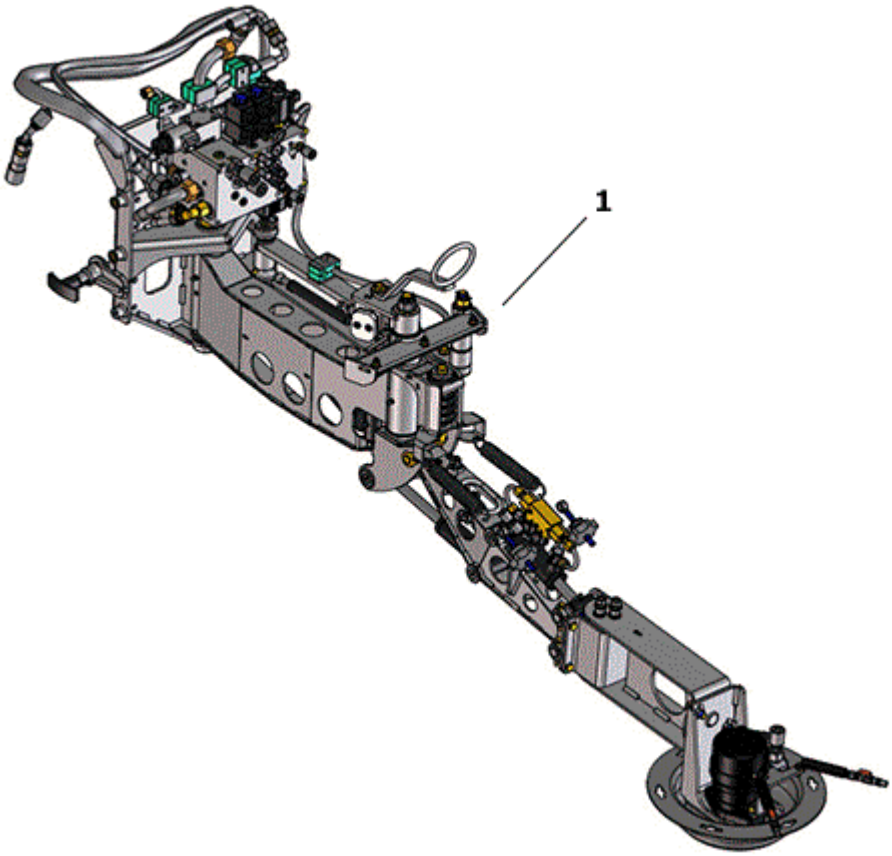

FIGURE	REFERENCE	DENOMINATION	AMOUNT
001	48.13705.00	THIRD ARM ASSEMBLY BRUSH	1

OPTION AND VARIANTS

THIRD BRUSH

CHASSIS: 73359

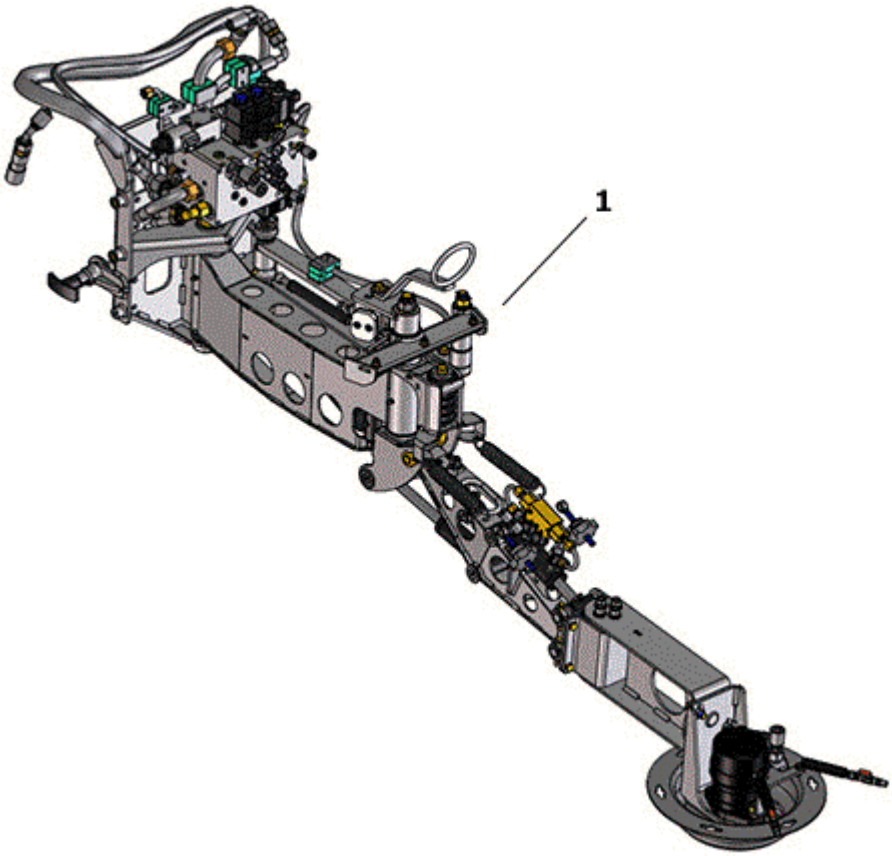

FIGURE	REFERENCE	DENOMINATION	AMOUNT
001	48.13705.01	NEW THIRD ARM ASSEMBLY BRUSH	1

OPTION AND VARIANTS

THIRD ARM BRUSH (PART I)

CHASSIS: 71236

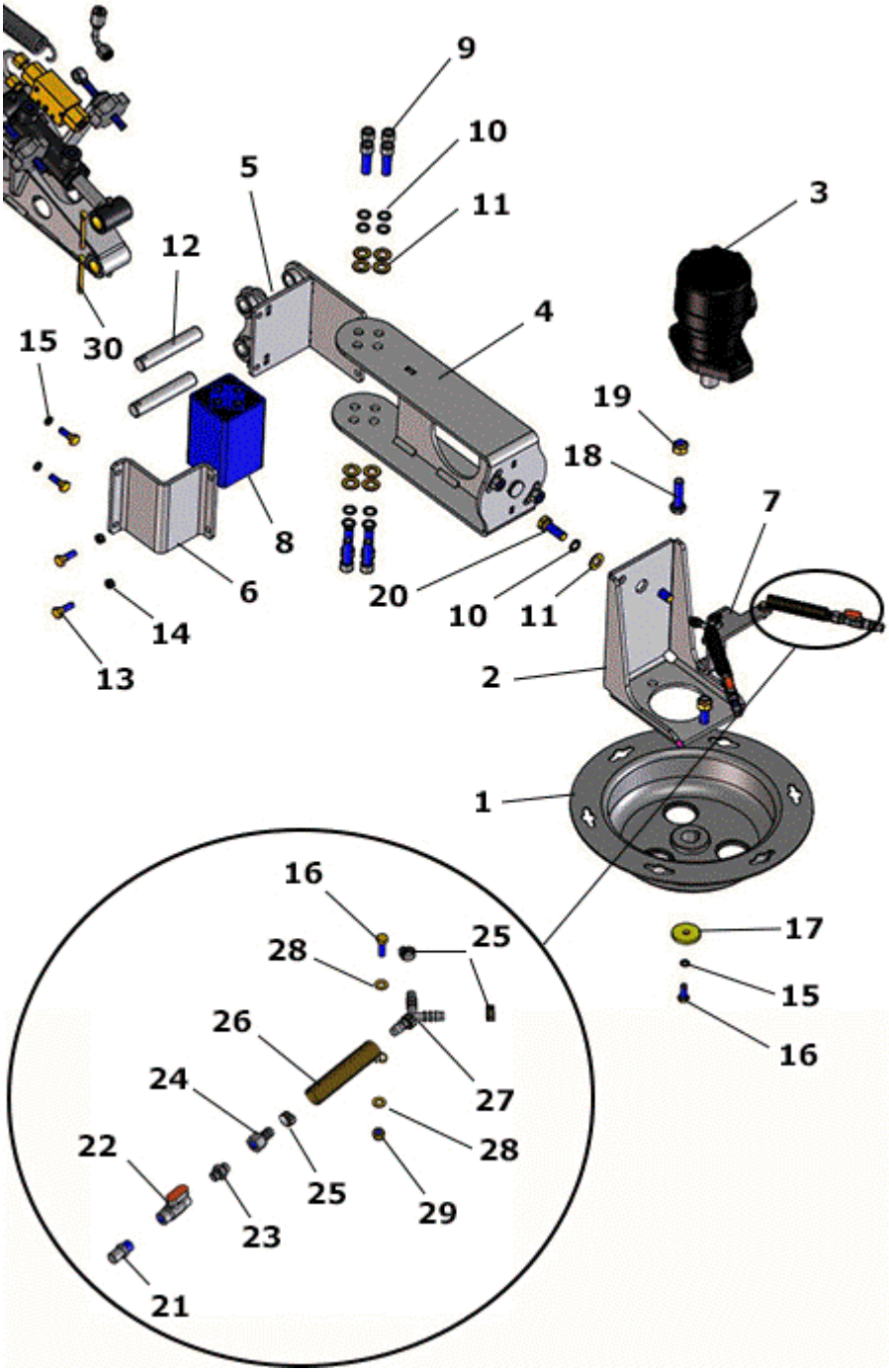

FIGURE	REFERENCE	DENOMINATION	AMOUNT
001	46.09615.03	SUPPORT 485X100	1
002	48.13780.01	MOTOR SUPPORT 216X160X130	1
003	46.95400.00	HYDR. MOTOR 200C.C. SWEEPER	1
004	48.13790.01	JOINT SUPPORT	1
005	48.13770.02	SUPPORT CUSHION	1
006	48.13771.00	SUPPORT	1

007	48.09614.00	SPRINKLER STAND	1
008	46.95245.00	78X78X130 MECHANICAL FUSE	1
009	601.12040.86	SCREW DIN912	8
010	104.12000.00	WASHER DIN7980 D12	10
011	101.12000.67	WASHER DIN 125 D12	10
012	48.13729.01	AXLE	2
013	604.08025.86	SCREW DIN931	4
014	711.08000.66	NUT DIN982 M8	2
015	104.08000.00	WASHER DIN7980 D8	3
016	603.08020.87	SCREW DIN933 M8x20	1
017	46.95106.00	WASHER 5X9X40 ARM B300	1
018	603.12045.86	SCREW DIN933	3
019	711.12000.66	NUT DIN982 M12	2
020	604.12035.87	SCREW DIN 931 M12x35	2
021	48.10106.00	RACORD M/M SPRINKLER 1/8-D 0.84	2
022	48.10116.00	BALL VALVE 1 / 8 "FEMALE	2
023	09.00340.00	NIPPLE M/M	2
024	46.10107.00	RACORD M/H D7X1/8	2
025	948.01308.00	SPRING CLAMP Ø13	5
026	46.95191.00	SPRING TRAC. D2XD13.75XD17.75	2
027	46.02199.00	RACOR FORT M/M/M D8XD8XD8	1
028	101.06000.67	WASHER DIN125 D6	1
029	711.06000.67	NUT DIN 982 M6	2
030	401.06050.60	PIN	2

OPTION AND VARIANTS

THIRD ARM BRUSH (PART 3)

CHASSIS: 71236

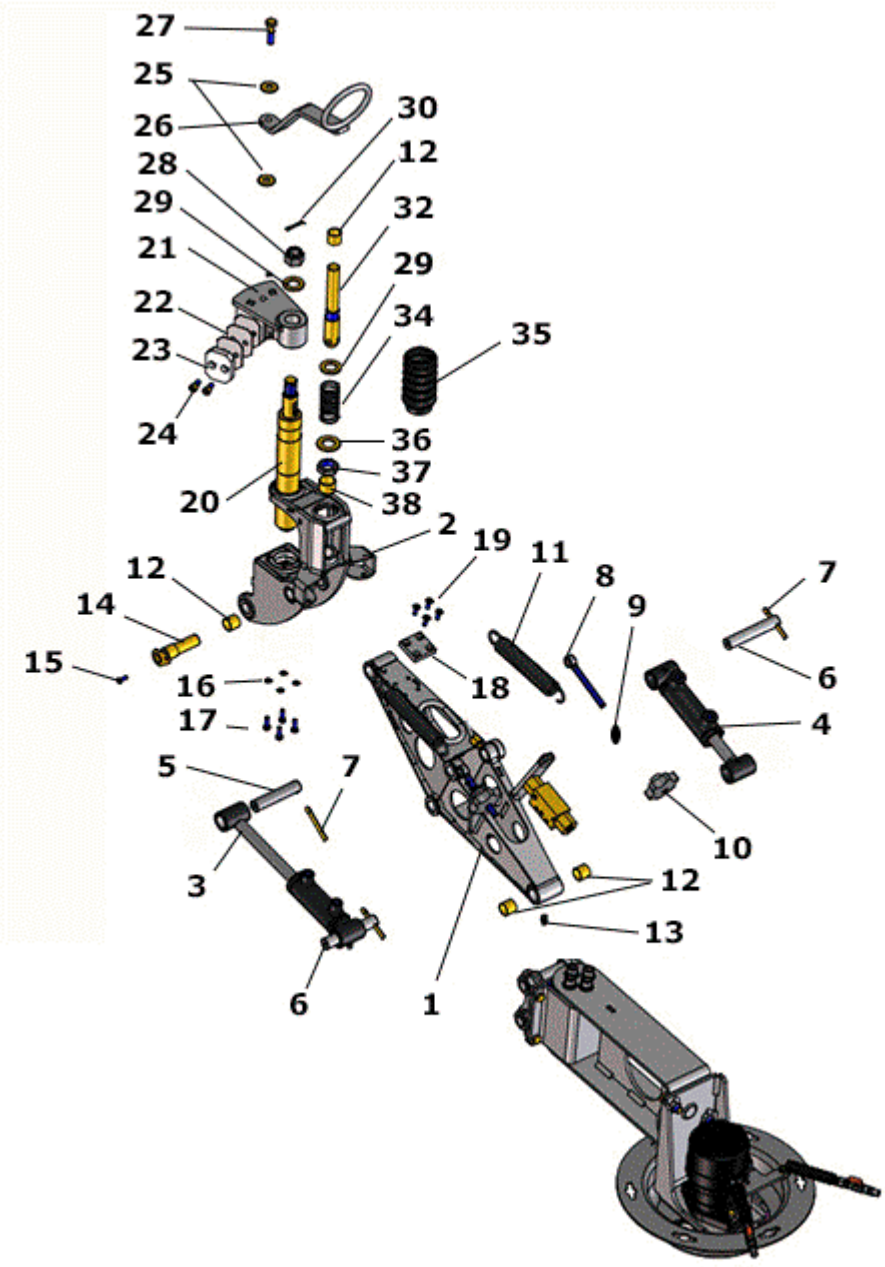

FIGURE	REFERENCE	DENOMINATION	AMOUNT
001	48.13720.01	REAR ARM 532X243X178	1
002	48.13740.01	CENTRAL SUPPORT ARM	1
003	48.13785.01	CYLINDER D/E D32XD20XL321XC66	1
004	48.13795.01	CYLINDER D/E D32XD20XL222XC58	1
005	48.13741.00	AXLE	1
006	48.13729.01	AXLE	2
007	401.06050.60	PIN	3
008	46.95159.00	SCREW DIN 444 M10X100	2
009	46.95160.00	WASHER D30X9	2

010	46.95163.00	FEMALE KNOB M10	2
011	48.09613.00	SPRING D28.5XD20.5X170	2
012	949.02020.00	bush 20X23X20 DIN 1494	5
013	901.08000.33	GREASER DIN71412-A M8x1,25	2
014	48.13747.01	AXLE	1
015	630.06015.97	SCREW M6x15 ISO7380	1
016	104.06000.00	WASHER DIN7980 D6	4
017	603.06020.87	SCREW DIN933 M6x20	4
018	48.13721.01	REINFORCEMENT	1
019	618.06020.87	SCREW. DIN7991 M6x20	4
020	48.13745.02	AXLE	1
021	48.13760.01	SUPPORT ARTICULATED	1
022	48.13702.00	GRUESO REG. REC. 48X60X1	6
023	48.13727.01	TOPE. PA 60X48X15	2
024	601.08015.87	SCREW. DIN912 M8x15	4
025	112.10000.66	WASHER DIN9021 D10	3
026	48.13762.00	SUPPORT	1
027	604.10040.86	SCREW DIN931	1
028	703.20000.60	SCREW DIN935 M20X2	1
029	101.20000.67	WASHER DIN 125 D20	2
030	401.04030.60	SPLIT PIN DIN94 4x30	1
032	48.13742.01	AXLE	1
034	48.13743.00	SPRING	1
035	46.06492.00	DUST COVER	1
036	101.22000.67	WASHER	1
037	709.22000.67	SCREW	1
038	949.02520.00	CAP. 25X28X20	1

OPTION AND VARIANTS

THIRD ARM BRUSH (PART 3)

CHASSIS: 71236

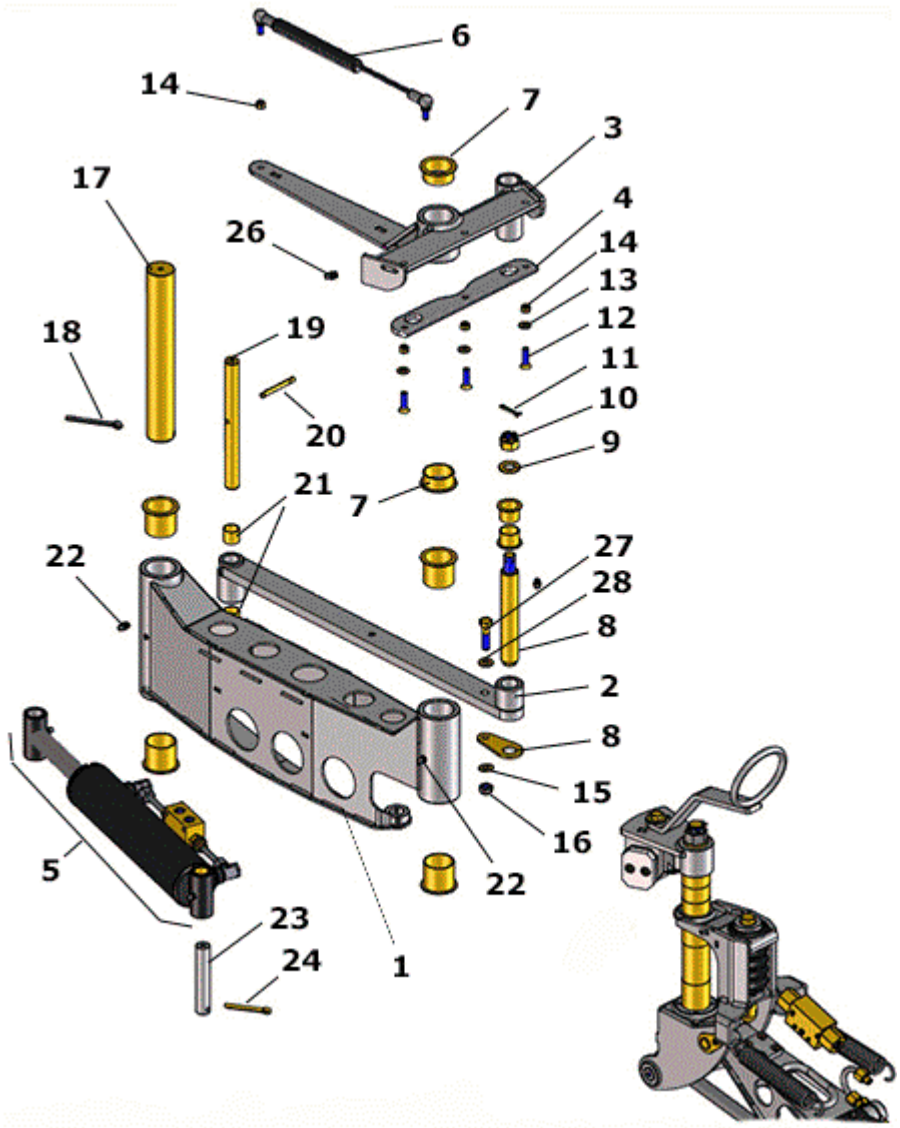

FIGURE	REFERENCE	DENOMINATION	AMOUNT
001	48.13730.01	ARM. PREVIOUS	1
002	48.13746.01	TENSE D25X604X51	1
003	48.13750.01	SUPPORT	1
004	48.13728.01	REINFORCEMENT DOLLY 269X41X8	1
005	48.13775.01	CYLINDER	1
006	70.08038.01	SHOCK ABSORBER	1
007	959.04020.00	CAP	2
008	48.13744.01	AXLE	1
009	101.16000.67	WASHER DIN125 D16	1
010	710.16000.66	NUT	1
011	401.04030.60	SPLIT PIN DIN94 4x30	1
012	618.08030.87	SCREW DIN7991 M8X30	3
013	101.08000.67	WASHER DIN125 D8	3

014	720.08000.66	NUT DIN985 M8 AUTOLOCKING	4
015	101.10000.67	D10 WASHER DIN125	1
016	720.10000.66	NUT	1
017	48.13610.01	AXLE	1
018	401.06070.60	PIN DIN94 6x70	1
019	48.13726.01	AXLE	1
020	401.06050.60	PIN	1
021	949.02020.00	bush 20X23X20 DIN 1494	2
022	901.08000.33	GREASER DIN71412-A M8x1,25	2
023	48.13729.01	AXLE	1
024	401.06050.60	PIN	1
026	901.08000.33	GREASER DIN71412-A M8x1,25	2
027	604.10040.87	SCREW DIN931 M10x40	1
028	48.13744.01	AXLE	1

OPTION AND VARIANTS

THIRD ARM BRUSH (PART 4)

CHASSIS: 71236

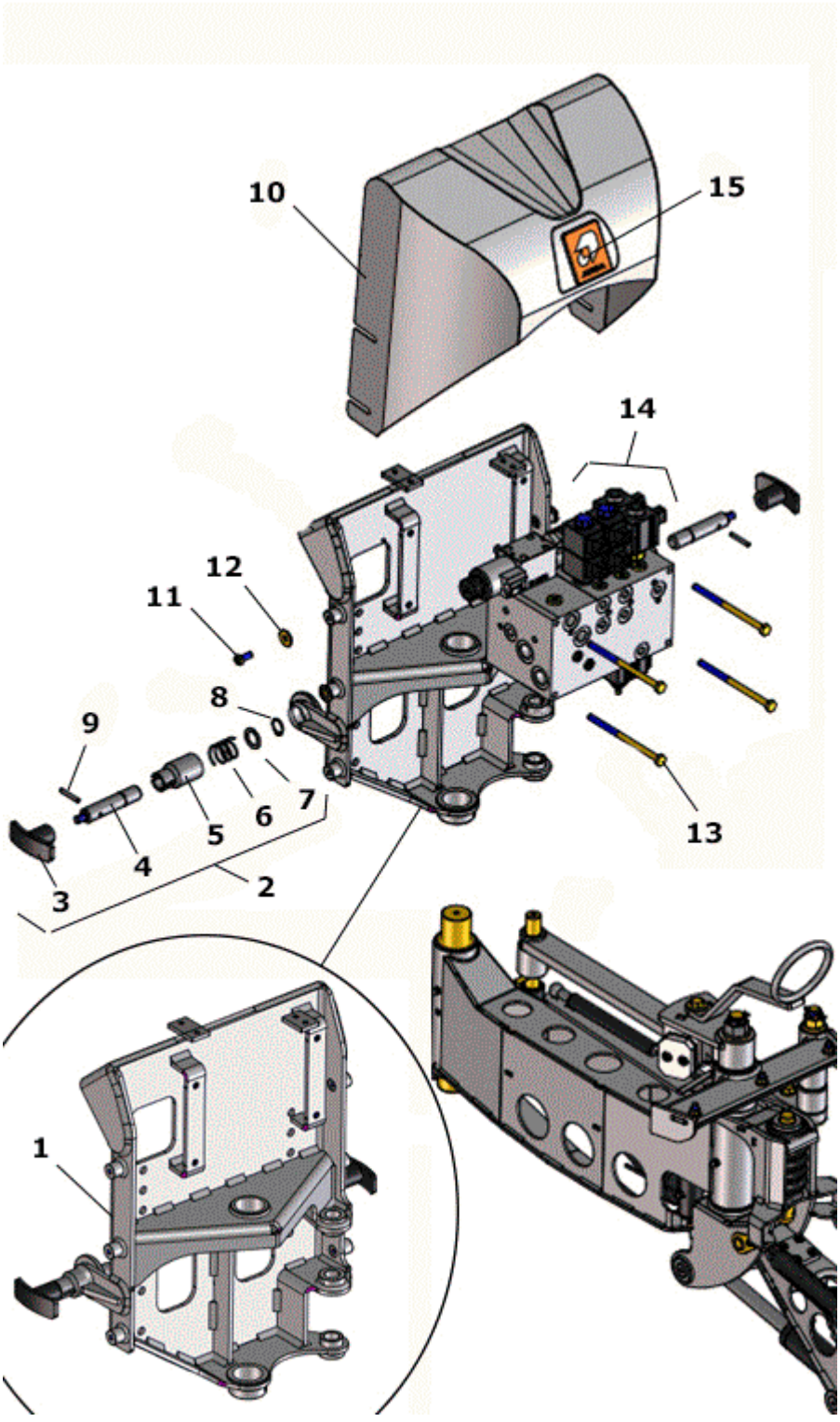

FIGURE	REFERENCE	DENOMINATION	AMOUNT
001	48.13710.01	THIRD BASE BRUSH	1
002	46.09750.00	TIGHT PIN 120XD35	2
003	46.09754.00	TCO GRIP FEMALE M10	2
004	46.09752.00	SHAFT CIL / CIL M10XD20X98	2

005	46.09751.00	MAT. TUBO MET. CIL. D30X2.5	2
006	43.01656.00	SPRING COMPRESSION	2
007	46.09753.00	WASHER. D24.5XD29.5X2	2
008	904.20000.00	RING 0,5 MM.	2
009	407.05036.06	D5X36 PIN DIN 7343	2
010	48.13765.03	COVER. HYDRAULIC BLOCK	1
011	630.08020.97		4
012	112.08000.67	WASHER DIN9021	4
013	604.08140.87	SCREW	4
014	48.10430.01	THIRD BLOCK VALVE BRUSH	1
015	46.08099.00	AUSA BADGE	1

OPTION AND VARIANTS

WORK LIGHTS

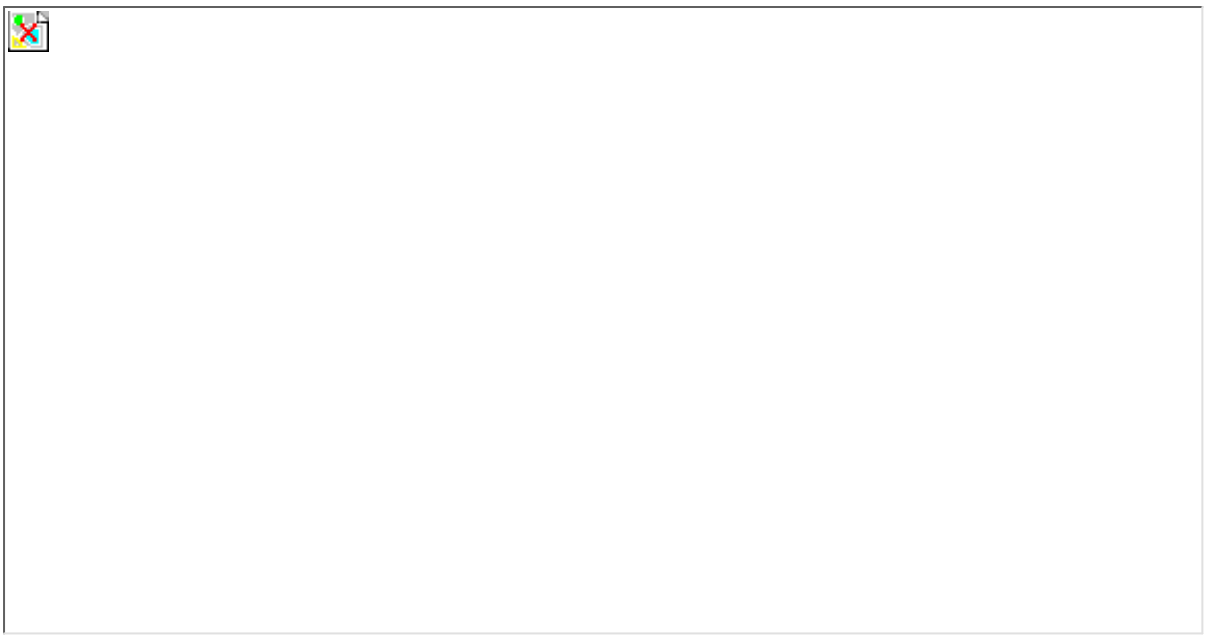

FIGURE	REFERENCE	DENOMINATION	AMOUNT
001	48.11034.01	LED WORKING LIGHT GEN3 13W	1
002	603.10020.86	SCREW DIN933 M10x20	1
003	711.10000.86	NUT DIN982 M10 C8	1

OPTION AND VARIANTS

WEED BRUSH

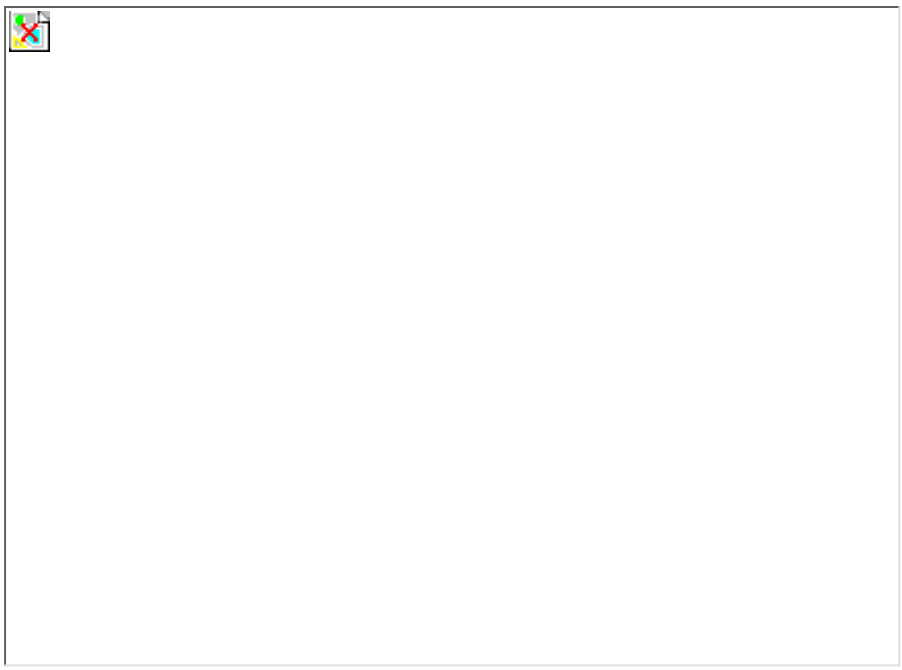

FIGURE	REFERENCE	DENOMINATION	AMOUNT
001	48.09750.00	WEED BRUSH	2

12. FINISHES
PLATES AND DECALS

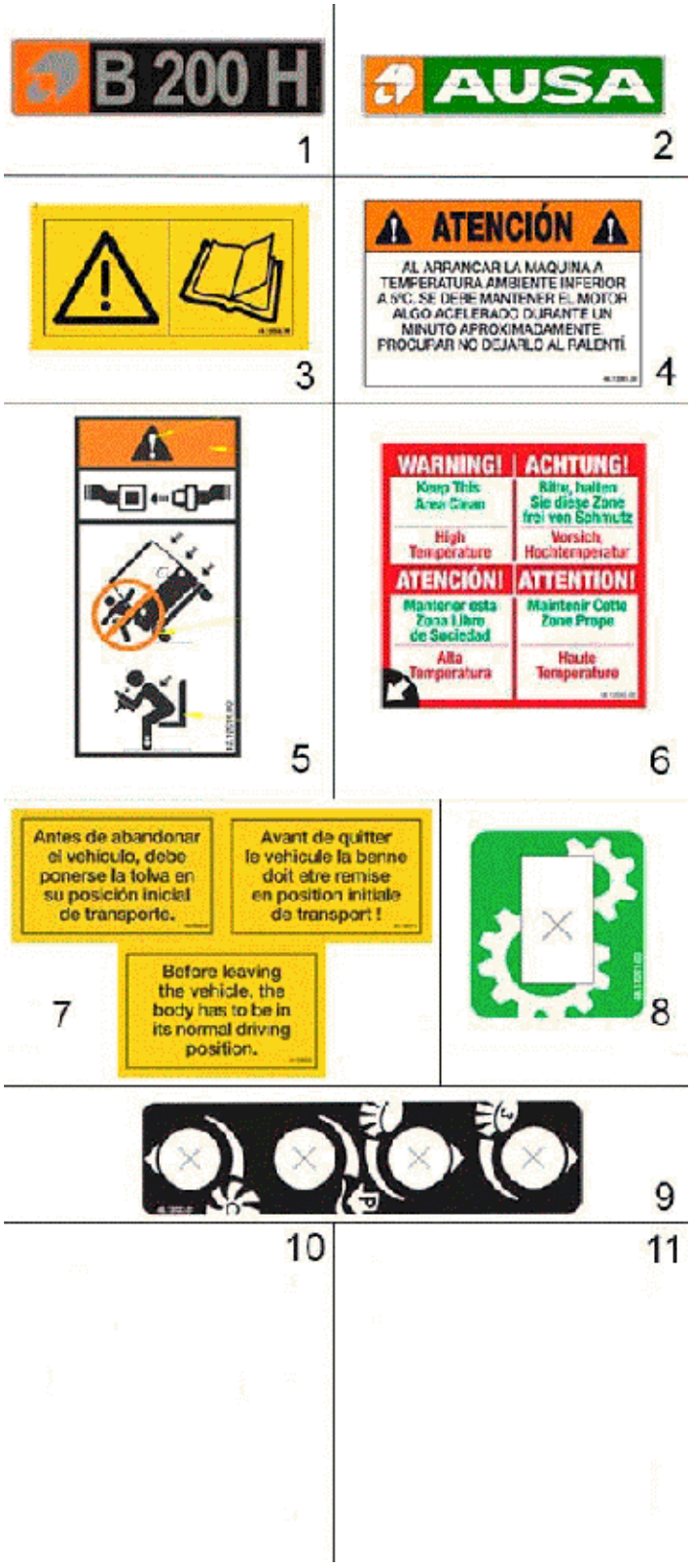

FIGURE	REFERENCE	DENOMINATION	AMOUNT
001	48.12016.00	STICKER B200H	1
002	00.00015.00	AUSA CORP. STICKER	1
003	48.12026.00	STICKER BOOK INSTRUCTIONS	1

004	46.12361.00	ADHESIVE, 54x86 SPA	1
005	12.12010.00	ADHESIVE	1
006	48.12050.00	HIGH TEMPERATURE STICKER	1
007	46.12363.00	ADHESIVE, 54x86 SPA	1
007	46.12363.01	FRENCH STICKER 54X86	1
007	46.12363.02	ENGLISH WARNING STICKER	1
008	48.12021.00	STICK WORK MODE	1
009	48.12023.01	STIKER BARREDORA	1

12. FINISHES

PLATES AND DECALS

BASTIDOR: 71018

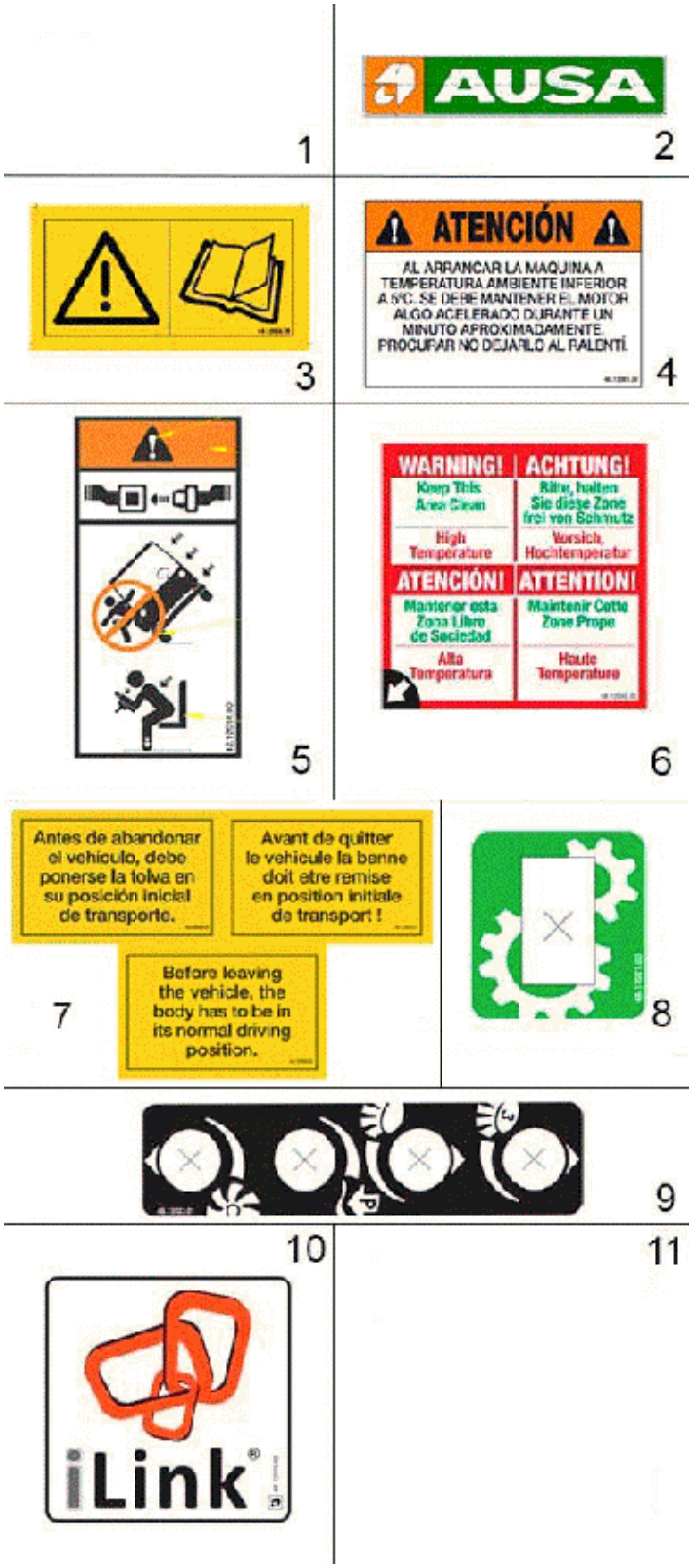

FIGURA	REFERENCIA	DENOMINACIÓN	CANTIDAD
002	00.00015.00	AUSA CORP. STICKER	1
003	48.12026.00	STICKER BOOK INSTRUCTIONS	1
004	46.12361.00	ADHESIVE, 54x86 SPA	1

005	12.12010.00	ADHESIVE	1
006	48.12050.00	HIGH TEMPERATURE STICKER	1
007	46.12363.00	ADHESIVE, 54x86 SPA	1
007	46.12363.01	FRENCH STICKER 54X86	1
007	46.12363.02	ENGLISH WARNING STICKER	1
008	48.12021.00	STICK WORK MODE	1
009	48.12023.01	STIKER BARREDORA	1
010	48.12019.00	LINK STICKER 110X110	1

12. FINISHES

PLATES AND DECALS

BASTIDOR: 74014

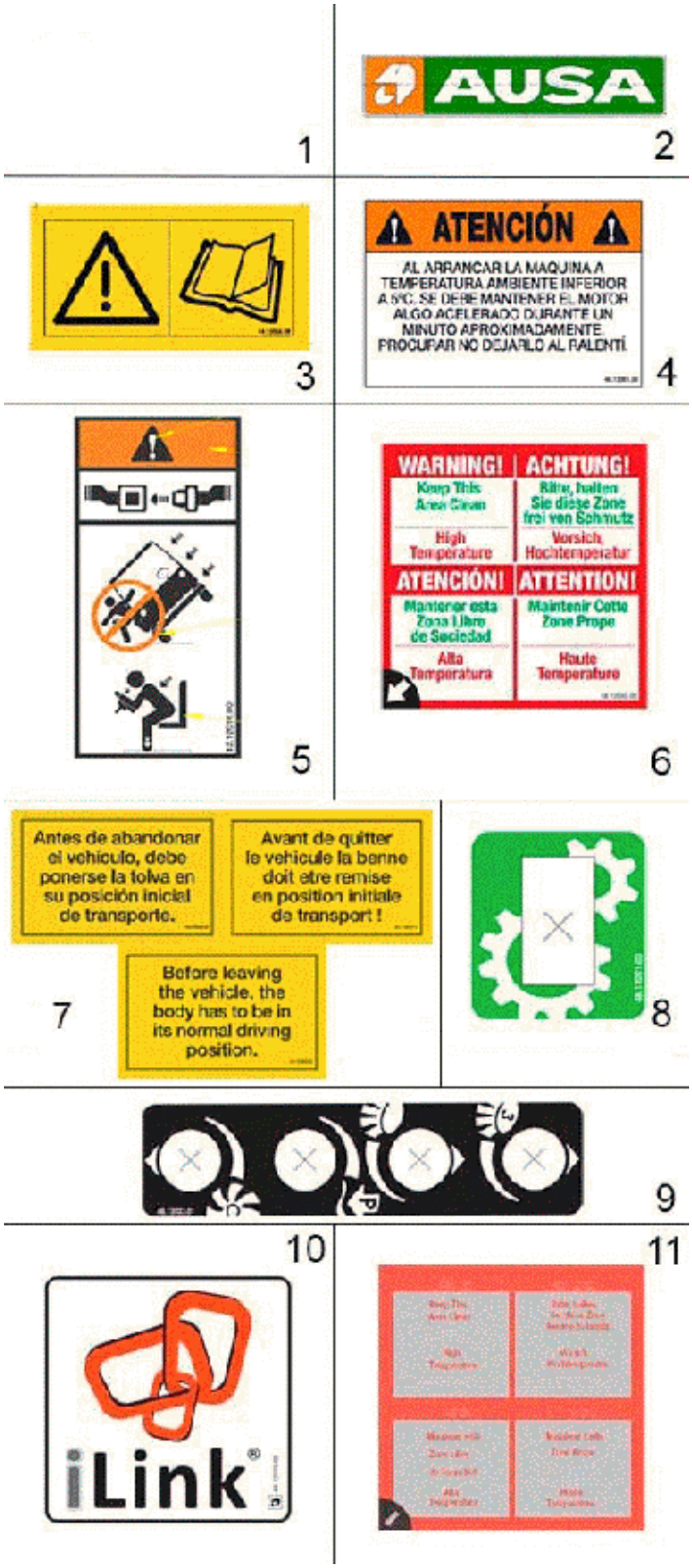

FIGURA	REFERENCIA	DENOMINACIÓN	CANTIDAD
002	00.00015.00	AUSA CORP. STICKER	1
003	48.12026.00	STICKER BOOK INSTRUCTIONS	1
004	46.12361.00	ADHESIVE, 54x86 SPA	1

005	12.12010.00	ADHESIVE	1
006	48.12050.00	HIGH TEMPERATURE STICKER	1
007	46.12363.00	ADHESIVE, 54x86 SPA	1
007	46.12363.01	FRENCH STICKER 54X86	1
007	46.12363.02	ENGLISH WARNING STICKER	1
008	48.12021.00	STICK WORK MODE	1
009	48.12023.01	STIKER BARREDORA	1
010	48.12019.00	LINK STICKER 110X110	1
011	48.12050.00	HIGH TEMPERATURE STICKER	1

INDEX

00. MAINTENANCE

Filters kit 2

02. ENGINE

MOTOR 3
MOTOR CIRCUIT EURO V 4
Engine Coupling 5
Engine Coupling - 68961 6
Engine Coupling - 72014 7
Exhaust pipe - 75721 8
Radiator (Part 1) 9
Radiator (Part 1) - 70135 10
Radiator (Part 2) 11
Radiator (Part 2) - 70135 12
Radiator (Part 3) 13
Radiator (Part 4) - 69117 14

03. TRANSMISSION 4x2x2

Housings and axles 15
Housings and axles - 71901 16
Housings and axles - 75721 17
FRONT AXLE (1) 18
FRONT AXLE (1) - 67427 20
FRONT AXLE (1) - 69945 22
FRONT AXLE (1) - 71554 24
FRONT AXLE (1) - 75721 26
FRONT AXLE (2) 28
FRONT AXLE (2) - 68724 29
FRONT AXLE (2) - 75721 30
Rear axle 31
Rear axle - 71901 32

04. CHASSIS

FRONT SUSPENSION 33
REAR SHOCK ABSORBER 34
REAR SHOCK ABSORBER - 74230 35

Operation brake

Footbrake (Part 1) - 67682 36
Footbrake (Part 2) 37
Footbrake (Part 2) - 67682 38
Footbrake (Part 2) - 67975 39
Footbrake (Part 2) - 69117 40
Footbrake (Part 3) 41
Footbrake (Part 3) - 70155 42
Footbrake (Part 3) - 70240 43
Footbrake (Part 3) - 71901 44
Handbrake (Part 1) 45
Handbrake (Part 1) - 69945 46
Handbrake (Part 1) - 71901 47
Handbrake (Part 2) 48
Handbrake (Part 2) - 71901 49

06. DIRECTION

Steering (Part 1) - 71018 50
Steering (Part 2) - 71018 51

08. BODYWORK

PANEL (RIGHT DRIVING) - 72014 52
PANEL (RIGHT DRIVING) - 73016 53
TABLIER DRIVING LEFT - 73016 54
car body - 71859 55
SHEETS (1) 56
SHEETS (1) - 71019 57
SHEETS (1) - 73977 58
SHEETS (2) 59
SHEETS (2) - 73019 60
SHEETS (2) - 73621 61

10. HYDRAULIC DIAGRAM INSTALLATION

Valves (Part 1) - 71018 62
Valves - 70040 63
Valves - 71018 64
Valves - 71901 65
BACK FAST PLUGS 66
FRONT FAST PLUGS 67
Hydraulic Installation 68
ACTUATORS (4x2x2) - 72014 69
TRANSMISSION (4x2x2) - 71901 72
TRANSMISSION (4x2x4) - 71901 75

TURBINE ENGINE CONNECTIONS 78
TURBINE ENGINE CONNECTIONS - 72014 79

MACHINE WORK

HOPPER (PART 1) - 72970 80
HOPPER (PART 2) 81
HOPPER (PART 4) - 72970 82

09. MACHINE FUNCTIONS

HOPPER (09) 83
HOPPER (09) - 72502 84
HOPPER (09) - 73017 85
HOPPER (10) 86
HOPPER (03) - 75161 87
RIGHT BRUSH (1) 88
RIGHT BRUSH (1) - 71797 89
RIGHT BRUSH (PART 2) 90
RIGHT BRUSH (PART 3) 91
RIGHT BRUSH (PART 3) - 73926 92
LEFT BRUSH (PART 1) 93
LEFT BRUSH (PART 1) - 71797 94
LEFT BRUSH (PART 2) 95
LEFT BRUSH (PART 3) 96
LEFT BRUSH (PART 3) - 73926 97

11. ELECTRIC INSTALLATION

ELECTRICAL CONNECTION (GENERAL SECTION) - 69955 98
TOP DASHBOARD - 71901 99
Front work lights 100

13. ACCESSORIES

AIR CONDITIONING (1) 101
AIR CONDITIONING (2) 102
VIEW CAMERA 103

Option and variants

DISASSEMBLY TOOL 104
THIRD BRUSH - 71236 105
THIRD BRUSH - 73359 106
THIRD ARM BRUSH (PART I) - 71236 107
THIRD ARM BRUSH (PART 3) - 71236 108

THIRD ARM BRUSH (PART 3) - 71236 109
THIRD ARM BRUSH (PART 4) - 71236 110
Work lights 111
WEED BRUSH 112

12. FINISHES

Plates and decals 113
Plates and decals - 71018 114
Plates and decals - 74014 115